UNCLASSIFIED

AD 408 508

DEFENSE DOCUMENTATION CENTER

FOR

SCIENTIFIC AND TECHNICAL INFORMATION

CAMERON STATION, ALEXANDRIA, VIRGINIA

UNCLASSIFIED

NOTICE: When government or other drawings, specifications or other data are used for any purpose other than in connection with a definitely related government procurement operation, the U. S. Government thereby incurs no responsibility, nor any obligation whatsoever; and the fact that the Government may have formulated, furnished, or in any way supplied the said drawings, specifications, or other data is not to be regarded by implication or otherwise as in any manner licensing the holder or any other person or corporation, or conveying any rights or permission to manufacture, use or sell any patented invention that may in any way be related thereto.

408 508

63-4-2

CATALOGED BY DDC
AS AD No. 408508

Quarterly Progress Report

To

DEFENSE ATOMIC SUPPORT AGENCY

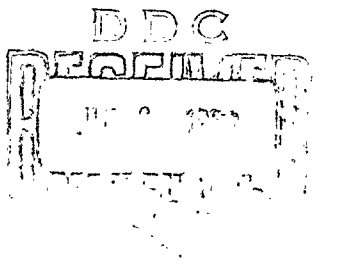

PLANETARY SCIENCES INCORPORATED
Santa Clara, California

QUARTERLY PROGRESS REPORT

TO

DEFENSE ATOMIC SUPPORT AGENCY

By

Marilyn E. Westin, John W. Hawes,

Nancy L. Nuhn, and Ernest Schlesinger

15 April 1963

PLANETARY SCIENCES INC.
P. O. Box 561
501 Washington Street
Santa Clara, California

TABLE OF CONTENTS

Summary. 3

Computer Program Description:

Integration - PSI010

Integration Trapezoidal Rule with End Correction - PSI010T. 4

Computer Program Description:

Differentiation - PSI011

Differentiation of an Empirical Function - PSI011E. 17

Computer Program Description:

Smoothing by Fourth Differences - PSI012. 37

Computer Program Description:

Cosine Taper - PSI013. 47

Computer Program Description:

Drift Removal - PSI014. 56

Computer Program Description:

Particle Motion Plots - PSI015. 66

Computer Program Description:

Bias Data Generation - PSI016. 76

Computer Program Description:

Pomeroy Plot - PSI019. 85

Appendix A:

Special Treatment of the Fourier Transform . . .96

SUMMARY

This report describes the progress achieved by Planetary Sciences Incorporated from January through March, 1963, on the preliminary analysis and interpretation of the digitized strong-motion seismograms. This work is being performed for the Defense Atomic Support Agency under Contract Number DA-49-146-XZ-186. (The analog-to-digital conversion work conducted at Nevada Test Site is not cataloged here.)

Research and analysis for seven digital-computer programs have been done. Six of the programs have been flowcharted, coded, and debugged on the IBM 1620. The seventh (PSI015) was processed on the IBM 7090 and CalComp plotter.

Two of the codes (PSI010-PSI010T and PSI011-PSI011E) integrate or differentiate a strong-motion seismogram one or more times. A third code (PSI014) removes the drift observed after integration using a quadratic fit.

PSI012 corrects for random errors in seismic data traces by smoothing with fourth differences.

Another of the codes (PSI013) cosine-tapers the end of a data trace so the last data reading is on the baseline.

PSI015 generates a magnetic tape to control a CalComp plotter for particle motion plots. PSI016 provides biased data to be used in conjunction with PSI015 for biased particle motion plots.

PSI019 may be used to obtain an indication of longitudinal transverse and surface waves from vertical, radial, and transverse seismic data.

In Appendix A, a special treatment of the Fourier Transform is discussed in which the function being transformed is evaluated only up to finite limits. This provides an explanation for the dependency of the slope of the phase angle on the duration selected. This effect had been noted by Messrs. W. V. Mickey and T. Shugart.

COMPUTER PROGRAM DESCRIPTION

PSI010 Integration IBM 1620

PSI010T Integration--Trapezoidal Rule with End Correction

By Marilyn E. Westin

PURPOSE:

To integrate a strong-motion seismogram one or more times. Any number of traces can be handled.

RESULT:

Values of velocity and displacement as computed from the seismic acceleration traces.

REQUIREMENTS:

1. A core storage of at least 40,000 digits.
2. The number of readings must not exceed 800 for each trace. (This number could be increased for an IBM 1620 with a larger memory by changing the number in the dimension statement of the Fortran deck before compiling.)

INPUT:

The form of input for the digital data must be identical with that described in the section "output" for computer program PSI002REV or PSI006REV.

METHOD:

The method for PSI010 was described in the "Semi-Annual Report to U. S. Coast and Geodetic Survey" by Planetary Sciences Inc., 31 December 1962. The equations have been modified to

shorten computer running time. In addition, in computing the first two integrals, the code assumes that the first data reading, as well as the two previous readings, are zero. The derivative at the leftmost endpoint (f'(a)) is also assumed to be zero. These assumptions are made on the basis of the data with which we are working. The program reads in the data beginning with the second reading, since the first reading is zero. The relationship between the data readings, the subscript N, and the computed integral SUM is shown in table 1.

For comparison purposes, the trapezoidal rule with end correction was also coded. This is PSI010T. The equations for this method are also described in the "Semi-Annual Report to United States Coast and Geodetic Survey", and the assumptions at the beginning of each trace are the same as for PSI010.

2	3	4	5	...	DATA READING
1	2	3	4	...	N
5	6	7	8	...	SUM

Table 1

ANALYSIS:

For a theoretical curve such as a sine wave, the results of PSI010 and PSI010T were practically the same: one was somewhat more accurate over certain portions of the curve while the other code was more exact over other portions. However, for the curve $\sin(x-\pi/2) + 1$ (which more closely resembles our data as the derivative is zero at x=0) PSI010 gave much

better results, as can be seen from table 2 and figure 1. Thus it is recommended that PSI010 be used for production.

When several actual acceleration traces were processed through PSI010 to obtain velocity, it was discovered that in each case a trend occurred, and the final velocity value was some large positive or negative number instead of zero, as had been expected. A more extreme example of this is shown in figure 2. We are trying to determine reasons for the existence of this problem and are currently working on a code which will remove this trend so that meaningful velocity and displacement curves can be obtained by integration of the acceleration traces. See PSI 014.

OPERATING INSTRUCTIONS:

The operating instructions are identical with those described in PSI011. In addition, if sense switch 2 is off, PSI010 will compute the integral at every other point; if sense switch 2 is on, it will calculate for every point.

OUTPUT:

For both PSI010T and PSI010 the form of the output is the same as for the input. Since the output is no longer the same type of trace, e.g., acceleration or displacement, JB is adjusted by subtracting 0111. Thus, for an acceleration trace which has been integrated once JB will equal 2111, the two indicating that it was acceleration, the ones that it is now velocity. The time of start after zero and the number of readings are also adjusted because the codes insert an extra zero or two at the beginning, depending upon the code. In addition, if

SIN(x - π/2) + 1 --- INTEGRATED VALUES

X	PSI010	Theoretical	PSI010T
0	0.0	0.0	0.0
π/10	.006563	.00514	-.001488
2π/10	.04329	.04053	.02715
3π/10	.1371	.13346	.1150
4π/10	.3099	.30559	.2839
5π/10	.5753	.57080	.5480
6π/10	.9382	.93390	.9122
7π/10	1.393	1.39010	1.371
8π/10	1.928	1.92549	1.912
9π/10	2.519	2.51842	2.511
π	3.141	3.14160	3.141
11π/10	3.763	3.76478	3.771
12π/10	4.355	4.35771	4.371
13π/10	4.889	4.89310	4.911
14π/10	5.345	5.34929	5.370
15π/10	5.707	5.71240	5.735
16π/10	5.973	5.97761	5.999
17π/10	6.146	6.14974	6.168
18π/10	6.243	6.24267	6.242
19π/10	6.278	6.27806	6.278

Table 2

DEVIATION FROM THEORETICAL

VALUES OF INTEGRATED CURVE SIN(X-π/2) + 1

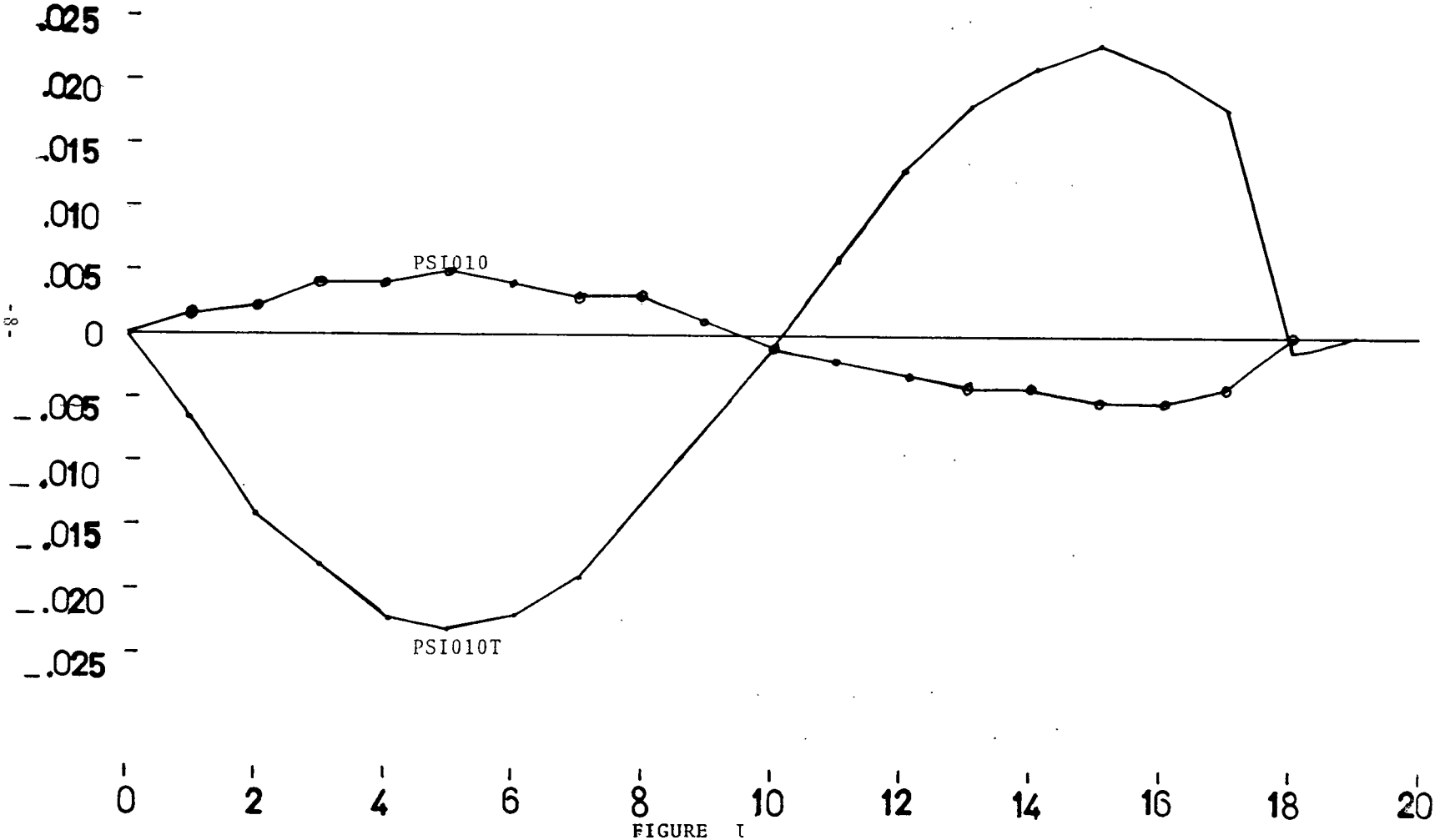

FIGURE 1

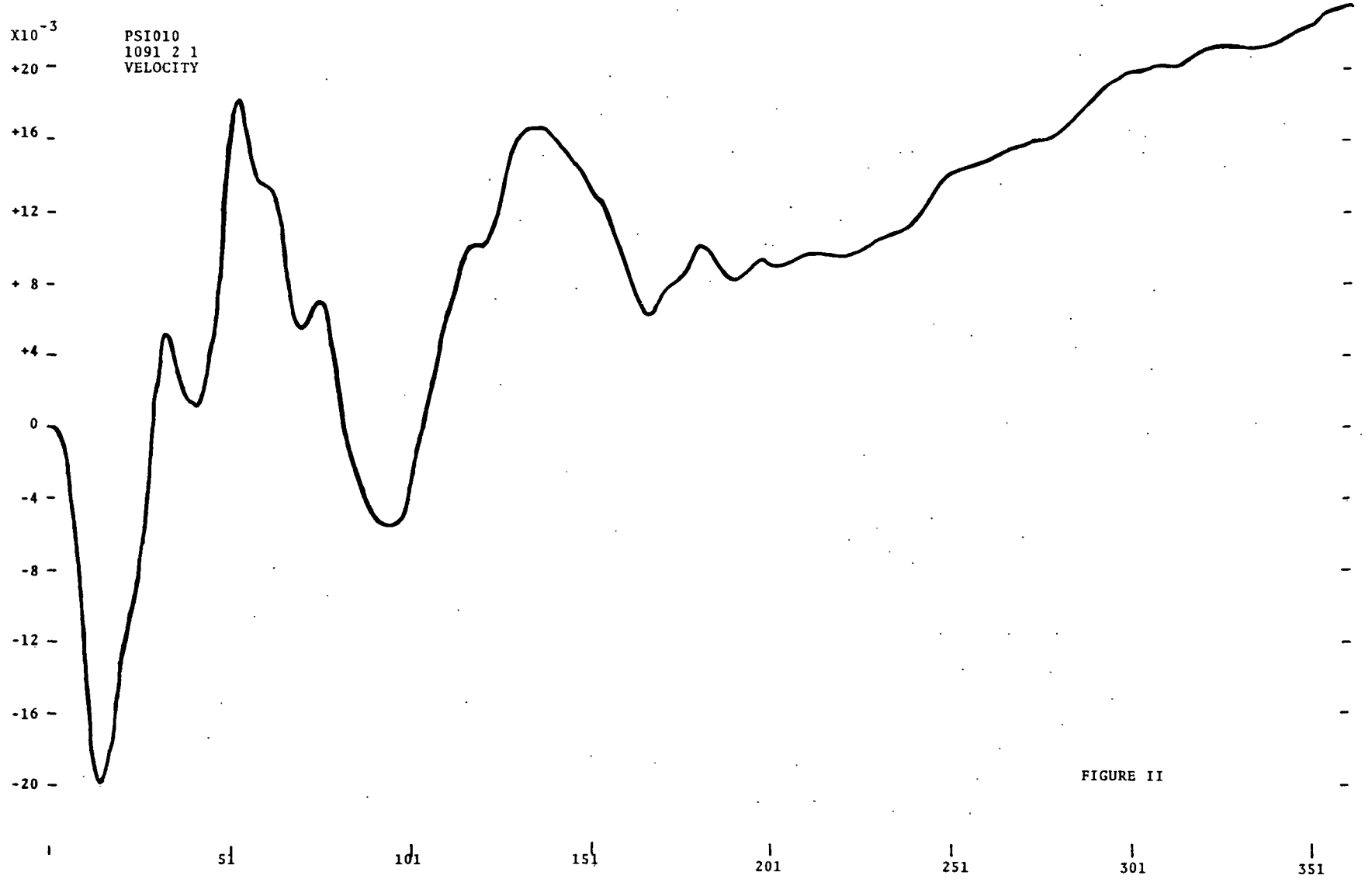
X10-3
PSI010
1091 2 1
VELOCITY
+20
+16
+12
+ 8
+4
0
-4
-8
-12
-16
-20
1
51
101
151
201
251
301
351

FIGURE II

only every other value of the integral is calculated in PSI010, the time increment is doubled.

Flow charts and listings of the Fortran decks are included on the following pages.

PSI 010

Integration — Fortran II

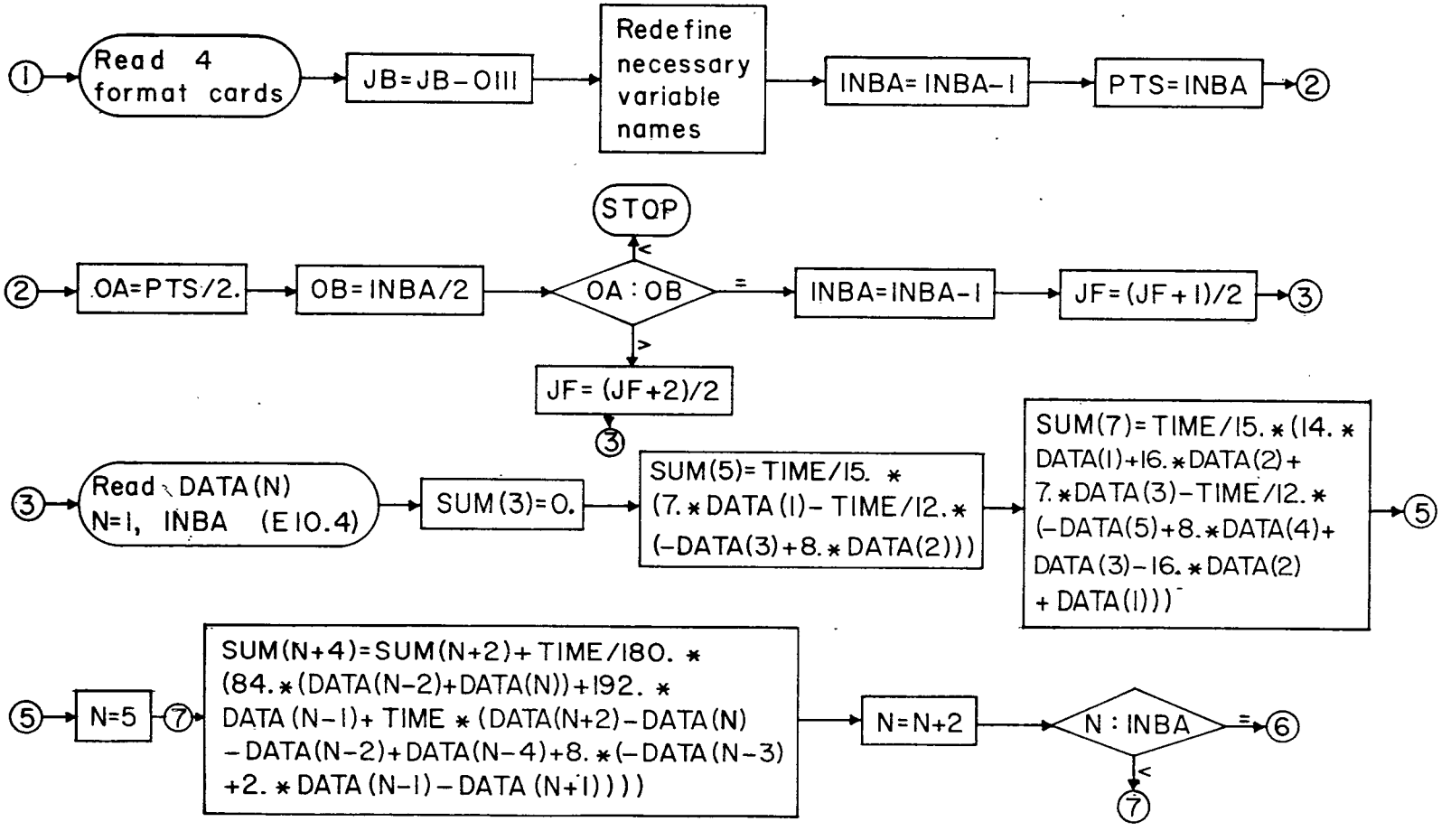

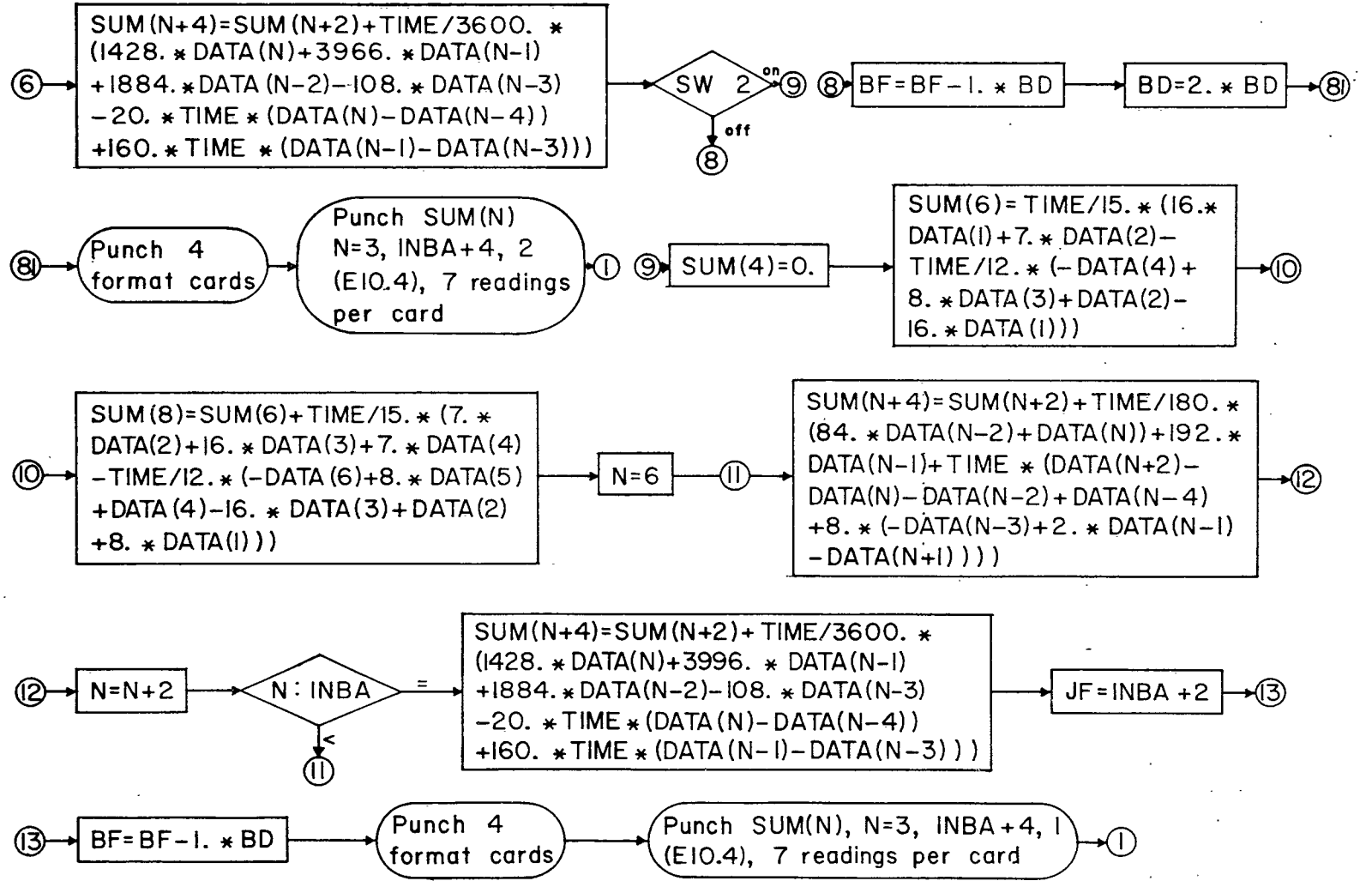
⑥
SUM(N+4)=SUM(N+2)+TIME/3600. * (1428. * DATA(N)+3966. * DATA(N-1) +1884. * DATA(N-2)-108. * DATA(N-3) -20. * TIME * (DATA(N)-DATA(N-4)) +160. * TIME * (DATA(N-1)-DATA(N-3)))
SW 2
on
off
⑨
⑧
BF=BF-1. * BD
BD=2. * BD
⑧1
⑧1
Punch 4 format cards
Punch SUM(N) N=3, INBA+4, 2 (E10.4), 7 readings per card
①
⑨
SUM(4)=0.
SUM(6)=TIME/15. * (16. * DATA(1)+7. * DATA(2)- TIME/12. * (-DATA(4)+ 8. * DATA(3)+DATA(2)- 16. * DATA(1)))
⑩
⑩
SUM(8)=SUM(6)+TIME/15. * (7. * DATA(2)+16. * DATA(3)+7. * DATA(4) -TIME/12. * (-DATA(6)+8. * DATA(5) +DATA(4)-16. * DATA(3)+DATA(2) +8. * DATA(1)))
N=6
⑪
SUM(N+4)=SUM(N+2)+TIME/180. * (84. * DATA(N-2)+DATA(N))+192. * DATA(N-1)+TIME * (DATA(N+2)- DATA(N)-DATA(N-2)+DATA(N-4) +8. * (-DATA(N-3)+2. * DATA(N-1) -DATA(N+1)))
⑫
⑫
N=N+2
N : INBA
=
<
⑪
SUM(N+4)=SUM(N+2)+TIME/3600. * (1428. * DATA(N)+3996. * DATA(N-1) +1884. * DATA(N-2)-108. * DATA(N-3) -20. * TIME * (DATA(N)-DATA(N-4)) +160. * TIME * (DATA(N-1)-DATA(N-3)))
JF=INBA+2
⑬
⑬
BF=BF-1. * BD
Punch 4 format cards
Punch SUM(N), N=3, INBA+4, 1 (E10.4), 7 readings per card
①

```
C                    PSI010
C      INTEGRATION
       DIMENSION DATA(800), SUM(800)
   21  READ 2, JA,JB,JC,JD,AE,AF,JG,AH,AI
    2  FORMAT (4I5,F9.0,F8.0,I4,F10.4,F10.0)
       READ 3, AK,JL,AM,AN,AO,AR,AS
    3  FORMAT (F10.4,I5,F10.4,F10.0,F10.4,F8.4,F10.4)
       READ 4, BA,BC,BD,BE,BF,BG
    4  FORMAT (F10.4,F10.0,F10.8,F10.0,F10.4,F10.0)
       READ 5, BH,BI,BJ,JF,JE
    5  FORMAT (2F10.4,F6.0,2I5)
       JB = JB - 0111
       INBA = JF
       TIME = BD
       STRT = BF
       INBA = INBA - 1
       PTS = INBA
       OA = PTS/2.
       OB = INBA/2
       IF (OA - OB) 6, 7, 8
    6  PRINT 9
    9  FORMAT (28H ERROR IN NUMBER OF READINGS)
       STOP
    8  JF = (JF+2)/2
       GO TO 10
    7  INBA = INBA - 1
       JF = (JF+1)/2
   10  READ 11, (DATA(N), N = 1, 6)
   11  FORMAT (10X, 6E10.4)
       READ 12, (DATA(N), N = 7, INBA)
   12  FORMAT (7E10.4)
       X = TIME/3600.
       Y = TIME/180.
       S1 = TIME/15.
       S2 = TIME/12.
       SUM(3) = 0.
       SUM(5) = S1*(7.*DATA(1)-S2*(-DATA(3)+8.*DATA(2)))
       SUM(7) = S1*(14.*DATA(1)+16.*DATA(2)+7.*DATA(3)-S2*(-DATA(5)+8.*
      /          DATA(4)-8.*DATA(2)+DATA(1)))
       INB = INBA - 2
       DO 13 N = 5, INB, 2
   13  SUM(N+4)=SUM(N+2)+Y*(84.*(DATA(N-2)+DATA(N))+192.*DATA(N-1)+TIME*
      /          (DATA(N+2)-DATA(N)-DATA(N-2)+DATA(N-4)+8.*(-DATA(N-3)+2.*
      /          DATA(N-1)-DATA(N+1))))
       N = INBA
       SUM(N+4)=SUM(N+2)+X*(1428.*DATA(N)+3996.*DATA(N-1)+1884.*DATA(N-2)
      /          -108.*DATA(N-3)-20.*TIME*(DATA(N)-DATA(N-4))+160.*TIME*
      /         (DATA(N-1)-DATA(N-3)))
       IF (SENSE SWITCH 2) 14, 15
   15  BF = BF - 1.*BD
       BD = 2.*BD
       PUNCH 2, JA,JB,JC,JD,AE,AF,JG,AH,AI
       PUNCH 3, AK,JL,AM,AN,AO,AR,AS
       PUNCH 4, BA,BC,BD,BE,BF,BG
       PUNCH 5, BH,BI,BJ,JF,JE
       IND = INBA + 4
       PUNCH 12, (SUM(N), N = 3, IND, 2)
       GO TO 21
   14  SUM(4) = 0.
       SUM(6) = S1*(16.*DATA(1)+7.*DATA(2)-S2*(-DATA(4)+8.*DATA(3)+
```

```
     /          DATA(2)-16.*DATA(1)))
      SUM(8) =  SUM(6)+S1*(7.*DATA(2)+16.*DATA(3)+7.*DATA(4)-S2*(-
     /          DATA(6)+8.*DATA(5)+DATA(4)-16.*DATA(3)+DATA(2)+8.*
     /          DATA(1)))
      INC = INBA - 3
      DO 16 N = 6, INC, 2
   16 SUM(N+4) =  SUM(N+2)+Y*(84.*(DATA(N-2)+DATA(N))+192.*DATA(N-1)+TIME
     /             *(DATA(N+2)-DATA(N)-DATA(N-2)+DATA(N-4)+8.*(-DATA(N-3)+
     /             2.*DATA(N-1)-DATA(N+1))))
      N = INBA - 1
      SUM(N+4) =  SUM(N+2)+X*(1428.*DATA(N)+3996.*DATA(N-1)+1884.*
     /             DATA(N-2)-108.*DATA(N-3)-20.*TIME*(DATA(N)-DATA(N-4))+
     /             160.*TIME*(DATA(N-1)-DATA(N-3)))
      JF = INBA + 2
      BF = BF - 1.*BD
      PUNCH 2, JA,JB,JC,JD,AE,AF,JG,AH,AI
      PUNCH 3, AK,JL,AM,AN,AO,AR,AS
      PUNCH 4, BA,BC,BD,BE,BF,BG
      PUNCH 5, BH,BI,BJ,JF,JE
      IND = INBA + 4
      PUNCH 12, (SUM(N), N = 3, IND)
      GO TO 21
      END
```

PSI 010 T

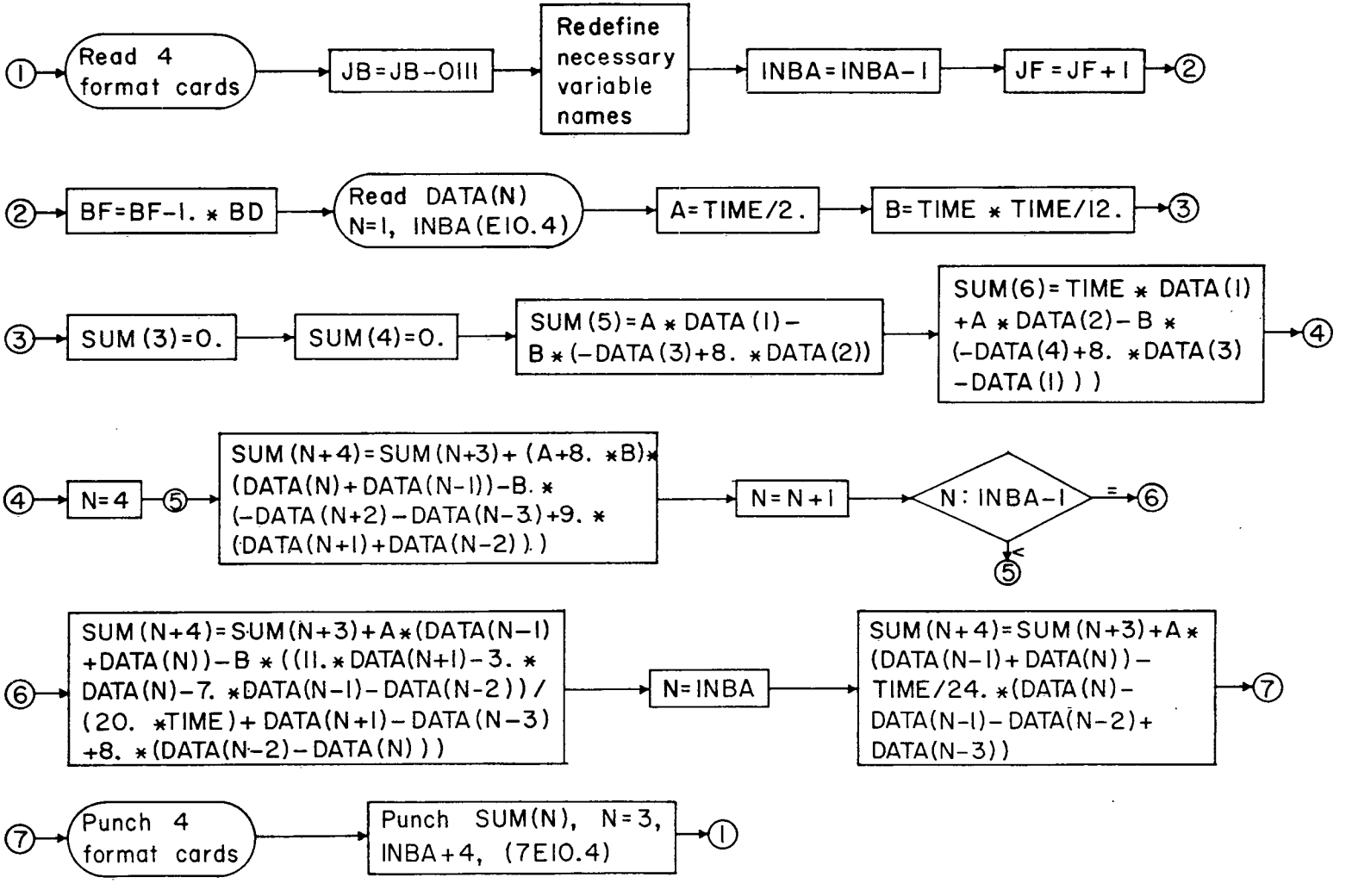
①
Read 4 format cards
JB=JB-0111
Redefine necessary variable names
INBA=INBA-1
JF=JF+1
②
②
BF=BF-1. * BD
Read DATA(N) N=1, INBA(E10.4)
A=TIME/2.
B=TIME * TIME/12.
③
③
SUM(3)=0.
SUM(4)=0.
SUM(5)=A * DATA(1)- B * (-DATA(3)+8. *DATA(2))
SUM(6)=TIME * DATA(1) +A * DATA(2)- B * (-DATA(4)+8. *DATA(3) -DATA(1)))
④
④
N=4
⑤
SUM(N+4)=SUM(N+3)+(A+8. *B)* (DATA(N)+DATA(N-1))-B. * (-DATA(N+2)-DATA(N-3)+9. * (DATA(N+1)+DATA(N-2)))
N=N+1
N: INBA-1
=
⑥
<
⑤
⑥
SUM(N+4)=SUM(N+3)+A*(DATA(N-1) +DATA(N))-B * ((11. * DATA(N+1)-3. * DATA(N)-7. *DATA(N-1)-DATA(N-2))/ (20. *TIME)+DATA(N+1)-DATA(N-3) +8. *(DATA(N-2)-DATA(N)))
N=INBA
SUM(N+4)=SUM(N+3)+A * (DATA(N-1)+DATA(N))- TIME/24. *(DATA(N)- DATA(N-1)-DATA(N-2)+ DATA(N-3))
⑦
⑦
Punch 4 format cards
Punch SUM(N), N=3, INBA+4, (7E10.4)
①

```
C                    PSI010T
C      INTEGRATION - TRAPEZOIDAL RULE WITH END CORRECTION
       DIMENSION DATA(800), SUM(800)
   21  READ 2, JA,JB,JC,JD,AE,AF,JG,AH,AI
    2  FORMAT (4I5,F9.0,F8.0,I4,F10.4,F10.0)
       READ 3, AK,JL,AM,AN,AO,AR,AS
    3  FORMAT (F10.4,I5,F10.4,F10.0,F10.4,F8.4,F10.4)
       READ 4, BA,BC,BD,BE,BF,BG
    4  FORMAT (F10.4,F10.0,F10.8,F10.0,F10.4,F10.0)
       READ 5, BH,BI,BJ,JF,JE
    5  FORMAT (2F10.4,F6.0,2I5)
       JB = JB - 0111
       INBA = JF
       TIME = BD
       STRT = BF
       INBA = INBA - 1
       JF = JF + 1
       BF = BF - 1.*BD
       READ 11, (DATA(N), N = 1, 6)
   11  FORMAT (10X, 6E10.4)
       READ 12, (DATA(N), N = 7, INBA)
   12  FORMAT (7E10.4)
       A = TIME/2.
       B = TIME*TIME/12.
       SUM(3) = 0.
       SUM(4) = 0.
       SUM(5) = A*DATA(1)-B*(-DATA(3)+8.*DATA(2))
       SUM(6) = TIME*DATA(1)+A*DATA(2)-B*(-DATA(4)+8.*(DATA(3)-DATA(1)))
       SUM(7) = SUM(6)+A*(DATA(2)+DATA(3))-B*(-DATA(5)+9.*(DATA(4)+
      /         DATA(1))-8.*(DATA(3)+DATA(2)))
       INX = INBA - 2
       DO 8 N = 4, INX
    8  SUM(N+4) = SUM(N+3)+(A+8.*B)*(DATA(N)+DATA(N-1))-B*(-DATA(N+2)-
      /          DATA(N-3)+9.*(DATA(N+1)+DATA(N-2)))
       N = INBA - 1
       SUM(N+4) = SUM(N+3)+A*(DATA(N-1)+DATA(N))-B*((11.*DATA(N+1)-3.*
      /           DATA(N)-7.*DATA(N-1)-DATA(N-2))/(20.*TIME)+DATA(N+1)
      /          -DATA(N-3)+8.*(DATA(N-2)-DATA(N)))
       N = INBA
       SUM(N+4) = SUM(N+3)+A*(DATA(N-1)+DATA(N))-TIME/24.*(DATA(N)-
      /           DATA(N-1)-DATA(N-2)+DATA(N-3))
       PUNCH 2, JA,JB,JC,JD,AE,AF,JG,AH,AI
       PUNCH 3, AK,JL,AM,AN,AO,AR,AS
       PUNCH 4, BA,BC,BD,BE,BF,BG
       PUNCH 5, BH,BI,BJ,JF,JE
       IND = INBA + 4
       PUNCH 12, (SUM(N), N = 3, IND)
       GO TO 21
       END
```

COMPUTER PROGRAM DESCRIPTION

PSI011 Differentiation IBM 1620
PSI011E Differentiation of an Empirical Function

By John W. Hawes

PURPOSE:

To differentiate seismic displacement traces to obtain meaningful velocity and acceleration curves.

RESULT:

The velocity and acceleration curves.

REQUIREMENTS:

1. A core storage of at least 40,000 digits.
2. The number of readings must not exceed 500 for the program PSI011 and 800 for the program PSI011E. (This number could be increased for an IBM 1620 with a larger memory by changing the number in the dimension statement of the Fortran deck and recompiling.)
3. The form of input for the digital data is described in detail in the section on input.

INPUT:

The form of input for digital data must be identical with that described in the section entitled "Output" for computer program PSI002REV (Semi-Annual Report to United States Coast and Geodetic Survey by Planetary Sciences Inc., 31 December, 1962.)

METHOD:

Since the convergence is greater at points halfway between the original tabulated points, it is desirable

to determine from the displacement the velocity at halfway points, then from the velocity the acceleration at halfway points. The acceleration values will be on the same points as displacement.

PSI011--The slope of the curve is obtained halfway between the points of observation using Bessel's formula:

$$(1)\quad y(x) = y_0 + (\delta y)_0 x + (\delta^2 y)_0 (x^2 - 1/4)/2 + (\delta^3 y)_0 x(x^2 - 1/4)/6 + (\delta^4 y)_0 (x^2 - 1/4)(x^2 - 9/4)/24 + (\delta^5 y)_0 x(x^2 - 1/4)(x^2 - 9/4)/120 + \ldots$$

(Reference: Lanczos, C., Applied Analysis, 1956, pp. 311-313)

Because it is necessary to eliminate fractional values when coding, the observed values are expanded to lie at every other x; so we can say that the central difference is y(x + 1) - y(x - 1) rather than y(x + 1/2) - y(x - 1/2). Differentiated, this becomes:

$$(2)\quad D = \delta - 1/24h\ \delta^3 + 3/640h\ \delta^5 \ldots$$

where,

δ = the central difference or $y(x+1) - y(x-1)$

$\delta^3 = y(x+3) - 2y(x+1) + 2y(x-1) - y(x-3)$

$\delta^5 = y(x+5) - 5y(x+3) + 10y(x+1) - 10y(x-1) + 5y(x-3) - y(x-5)$

where,

D = the derivative at x

y(x) = the observed value

x = the number of the point along the x axis to be differentiated (In this code these observed values are at x=2,4,6,8,10,... and the computed midpoint slopes are at x=1,3,5,7,9,...)

h = the interval or time between two observations

Revising this equation for more efficient use of computer time, we get:

(3) $D = (3/640h)(y(N+5)-y(N-5)) + (25/384h)(y(N-3-y(N+3)) + (75/64h)(y(N+1)-y(N-1))$

The two data points prior to the first observed value are assumed to be zero, as is the first data reading, and the statements in the code are simplified versions of equation (3).

PSI011E--Because our observed data is empirical rather than theoretical, Lanczos suggests the use of an empirical function where only four consecutive data are combined for differentiation.

Observed values on either side of the point where the slope is to be found are weighted one and the next points further out are weighted three. This results in the equation:

(4) $D = [-3f(x-3h/2)-f(x-1h/2)+f(x+1h/2)+3f(x+3h/2)]/10h$

D = the derivative at x

f(x-h) = the observed values

h = the interval or time between two observations

(Reference: Lanczos, C., Applied Analysis, 1956, p. 321-323)

Revising this equation for fixed point numbers (X=N) and for more efficient use of computer time, we get:

(4.1) $D = (3/10h)(f(N+1)-f(N-2)) + (1/10h)(f(N)-f(N-1))$

for simplicity the (x+1h/2) of (4) now is "N" and the other values are adjusted accordingly.

Once more, the two data points prior to the first observed value are assumed to be zero. The first observed value is also zero.

At the last observation there are only neighbors on one side of the data point. In this case the last value is computed:

(5) $D = [8f(x-h/2)-4f(x-3h/2)-6f(x-5h/2)+2f(x-7h/2)]/10h$

which gives as above:

$$D = [8f(N_1)-4f(N_1-1)-6f(N_1-2)+2f(N_1-3)]/10h$$

(Reference: Lanczos, D., Applied Analysis, 1956, p. 323)

ANALYSIS:

The two differentiation codes PSI011 and PSI011E were first tested on a theoretical curve. A sine curve was used. (Reference: Salzer, S.E., & Levine, N., Table of Sines and Cosines to Ten Decimal Places at Thousandths of a Degree, 1962.)

The resulting cosine curves were compared with a plotted cosine curve from book values. The results show that Bessel's formula--PSI011 gave answers closer than the empirical function--PSI011E. The empirical function reduced the amplitude of the cosine curve slightly because of its increased dependence on values further from the point where the slope is to be found.

The curves with which we are working, however, are not theoretical, but empirical. This condition was simulated by applying random numbers to the sine curve values used previously. (See figure 1) These altered readings were then differentiated with PSI011 and PSI011E. The results are shown in figure 1. Both results oscillate about the

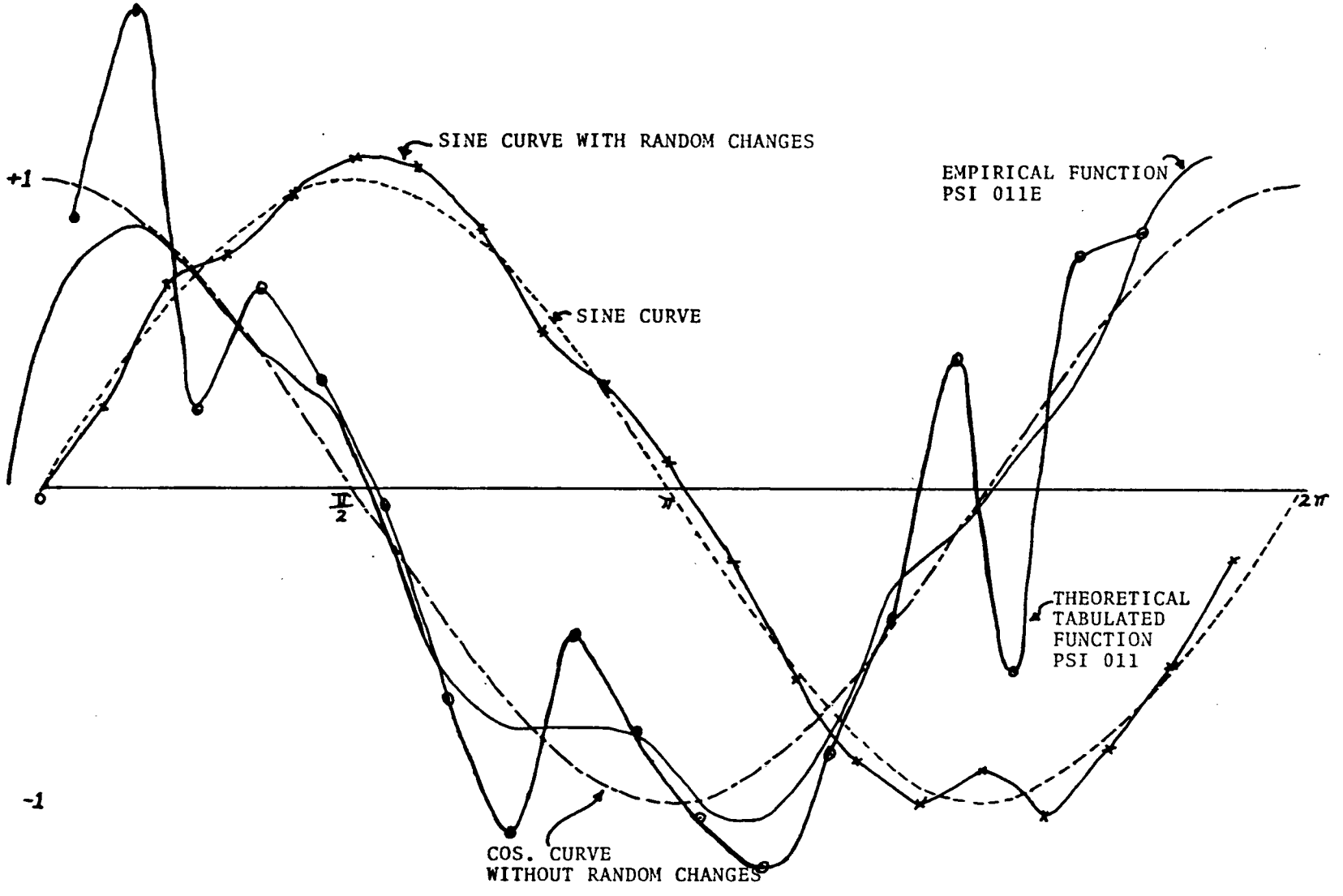

FIGURE I
DIFFERENTIATION OF SINE CURVE

theoretical cosine curve. However, PSI011 is very sensitive to variations from the sine curve, while PSI011E, though affected by the random changes, gives less radical and more meaningful results.

Therefore PSI011E was applied to trace 7250-0-2-0. After two passes, an acceleration curve resulted. This curve should correspond with the trace 7250-2-2-1. The initial data points of the two curves are plotted together in figure 2. The calculated values of PSI011E are plotted negative above the abscissa because the motion of the acceleration trace was measured initially down and that of the displacement trace initially up.

Results are effectively smoothed because of differentiation by empirical methods. The theoretical code was also applied to 7250-0-2-0. Extreme fluctuations confirmed the decision to use PSI011E. Fewer data points per second account for further smoothing in the computed acceleration curve. A phase shift also appears. In order to obtain reliable velocity curves, it will be necessary to adjust for this phase shift. This work is in process.

OPERATING INSTRUCTIONS:

1. Compile the Fortran (source) deck, using Fortran II.
2. To run the program, place the object program in the card reader. If the program was not compiled to include subroutines (the deck included was not) follow the source deck with Fortran II, deck III (subroutines).

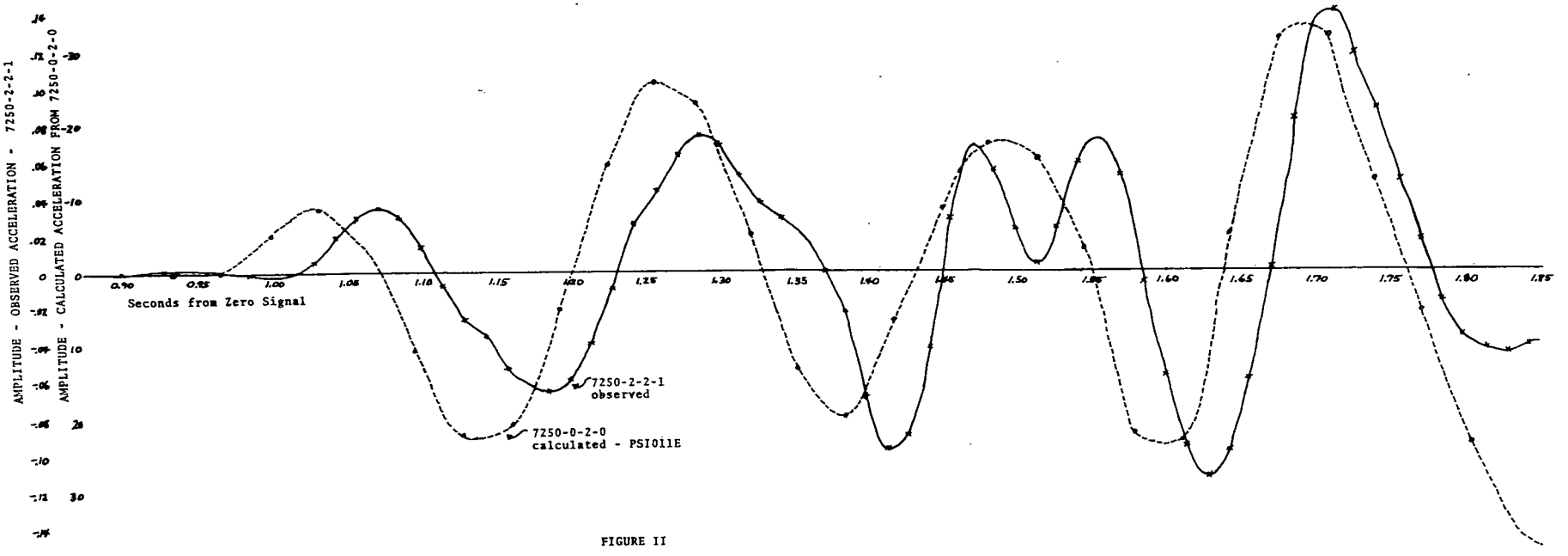

FIGURE II

ACCELERATION 7250-2-2

3. Place four format cards for the given trace in the card reader in proper order.
4. Insert data cards in proper order.
5. These programs will run any number of traces without a stop between. Just keep the hopper loaded. Steps three and four may be repeated as many times as necessary. The program operates on each trace separately, then goes back and looks to the card reader for more data.

OUTPUT: PSI011

The program first punches out the record number, type of trace, and component. The derivatives are then punched one per card and are numbered with odd numbers to indicate between which data points (numbered evenly) they fall.

The program will analyze only one data trace at a time; the object program must be loaded with each trace.

OUTPUT: PSI011E

The format of the output is identical with that of the input so that it may be processed through the code any number of times.

The starting time BF was moved back 1/2 time interval for the first value since the derivatives are calculated at the midpoints. (See figure 3) The first derivative value is set to equal to zero. The first three digits of JB, which indicates the type of trace, are increased by one to indicate that the results are velocity (1110) and on a

second differentiation, acceleration (2220). The last digit is left zero to indicate that the results were obtained from a displacement.

If the four format cards of input are numbered, the program will number the four format cards of output. Data cards are numbered consecutively beginning with five.

Flow charts and printouts of the programs are included on the following pages. Data values for Figures I and II are also enclosed.

DATA READINGS

Displacement			1		2		3		4		5 ...
Velocity		1		2		3		4		5 ...	
Acceleration	1		2		3		4		5 ...		

time increment per sample

Figure 3

PSI 011

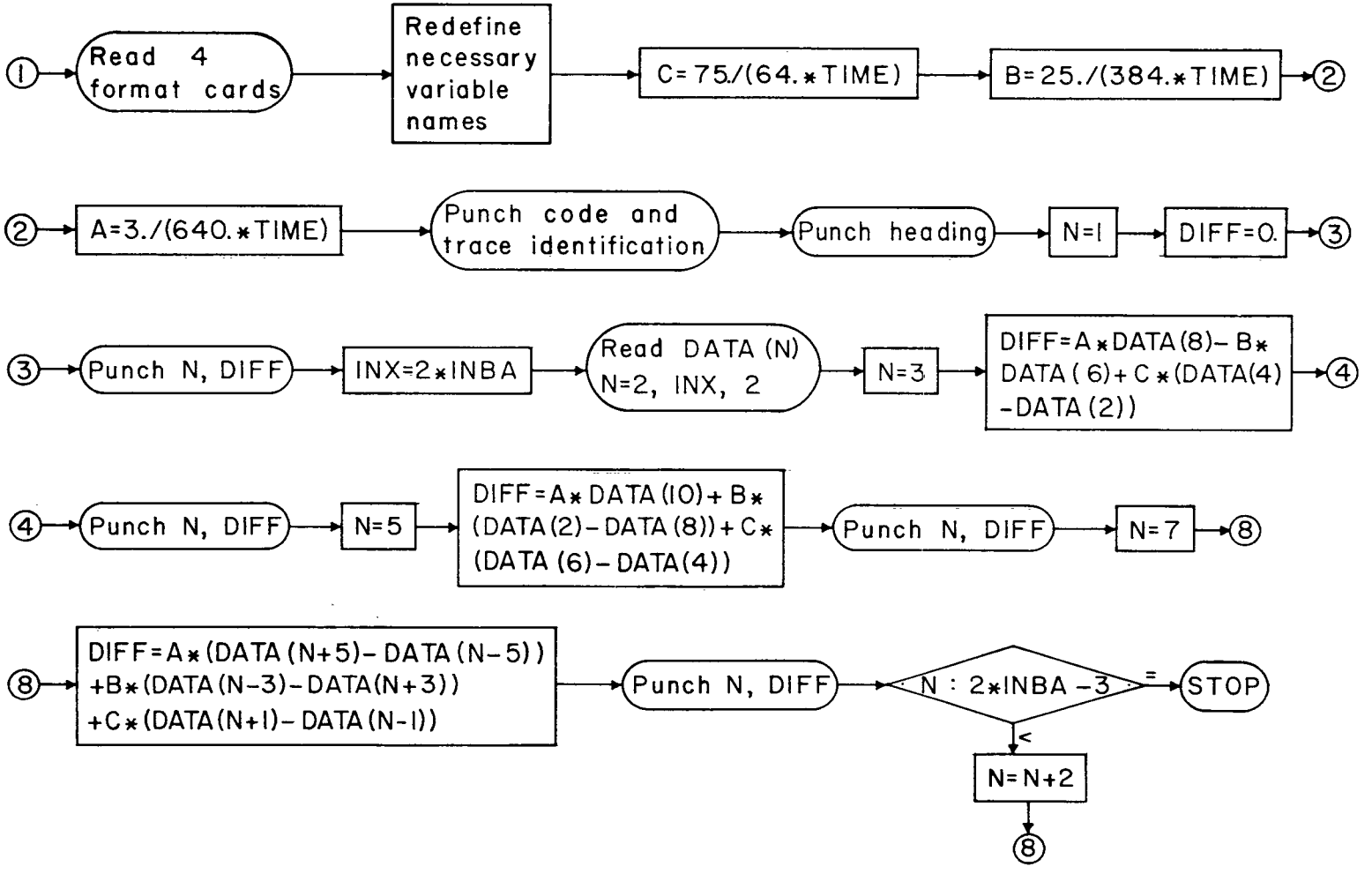
1
Read 4 format cards
Redefine necessary variable names
C=75./(64.*TIME)
B=25./(384.*TIME)
2
2
A=3./(640.*TIME)
Punch code and trace identification
Punch heading
N=1
DIFF=0.
3
3
Punch N, DIFF
INX=2*INBA
Read DATA (N) N=2, INX, 2
N=3
DIFF=A*DATA(8)-B*DATA(6)+C*(DATA(4)-DATA(2))
4
4
Punch N, DIFF
N=5
DIFF=A*DATA(10)+B*(DATA(2)-DATA(8))+C*(DATA(6)-DATA(4))
Punch N, DIFF
N=7
8
8
DIFF=A*(DATA(N+5)-DATA(N-5))+B*(DATA(N-3)-DATA(N+3))+C*(DATA(N+1)-DATA(N-1))
Punch N, DIFF
N : 2*INBA-3
=
STOP
<
N=N+2
8

```
C                    PSI011
C       DIFFERENTIATION
        DIMENSION DATA(1000)
        READ 2, JA,JB,JC,JD,AE,AF,JG,AH,AI
      2 FORMAT (4I5,F9.0,F8.0,I4,F10.4,F10.0)
        READ 3, AK,JL,AM,AN,AO,AR,AS
      3 FORMAT (F10.4,I5,F10.4,F10.0,F10.4,F8.4,F10.4)
        READ 4, BA,BC,BD,BE,BF,BG
      4 FORMAT (F10.4,F10.0,F10.8,F10.0,F10.4,F10.0)
        READ 5, BH,BI,BJ,JF,JE
      5 FORMAT (2F10.4,F6.0,2I5)
        INBA = JF
        TIME = BD
        C = 75./(64.*TIME)
        B = 25./(384.*TIME)
        A = 3./(640.*TIME)
        PUNCH 6
      6 FORMAT (16H PSI011  1/22/63)
        PUNCH 7, JA, JB, JC, JG
      7 FORMAT (I5, I5, I5, 10H   NOTE = , I4)
        PUNCH 8
      8 FORMAT (5H    N, 12H  DERIVATIVE)
        N=1
        DIFF=0.0
        PUNCH 12, N, DIFF
     12 FORMAT (I5, 1X, E14.7)
        INX = 2*INBA
        READ 11, (DATA(N), N = 2, INX, 2)
     11 FORMAT (7E10.4)
        N = 3
        DIFF=A*DATA(8)-B*DATA(6)+C*(DATA(4)-DATA(2))
        PUNCH 12, N, DIFF
        N = 5
        DIFF=A*DATA(10)+B*(DATA(2)-DATA(8))+C*(DATA(6)-DATA(4))
        PUNCH 12, N, DIFF
        INXT = INX - 3
        DO 17 N = 7, INXT, 2
        DIFF=A*(DATA(N+5)-DATA(N-5))+B*(DATA(N-3)-DATA(N+3))
       /     +C*(DATA(N+1)-DATA(N-1))
        PUNCH 12, N, DIFF
     17 CONTINUE
        END
```

PSI 011E

Differentiation—Fortran II

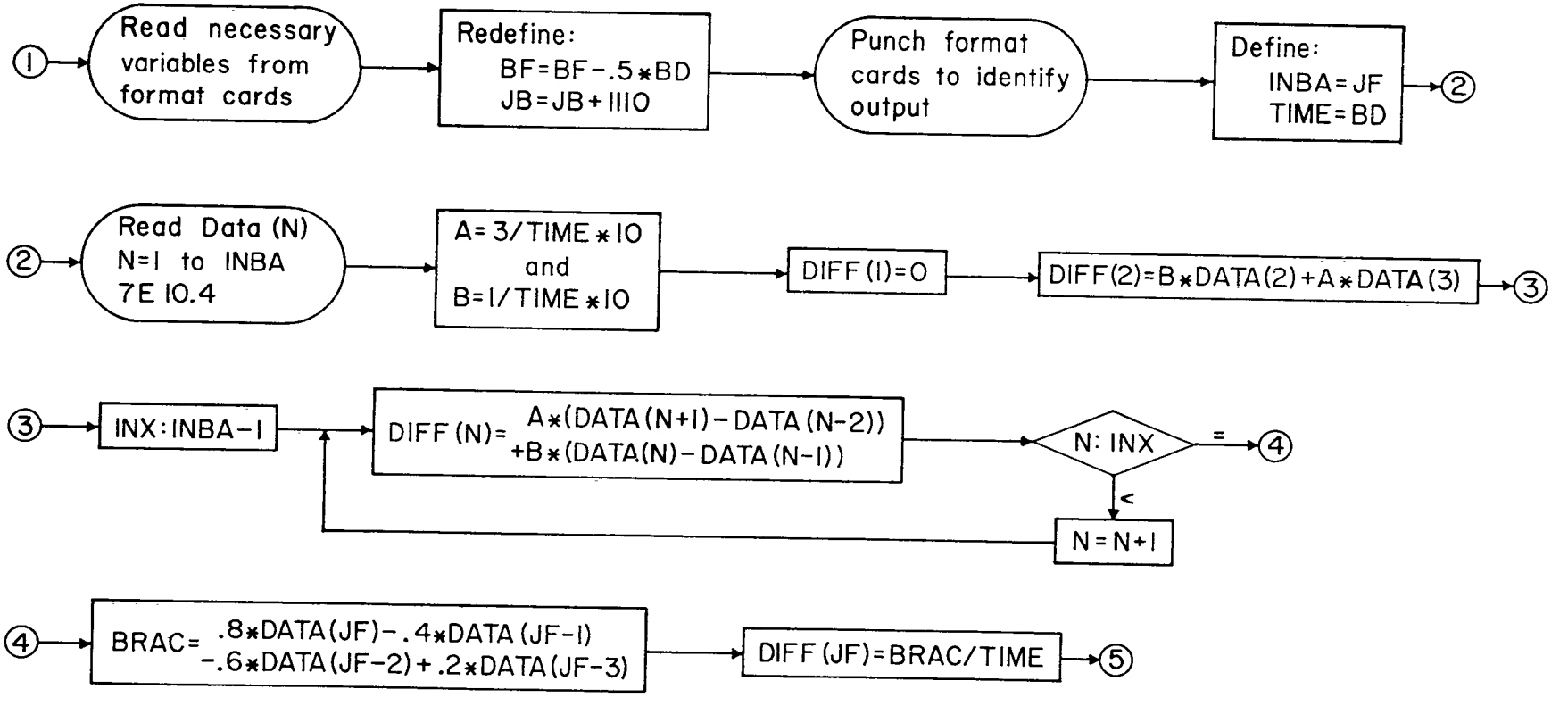

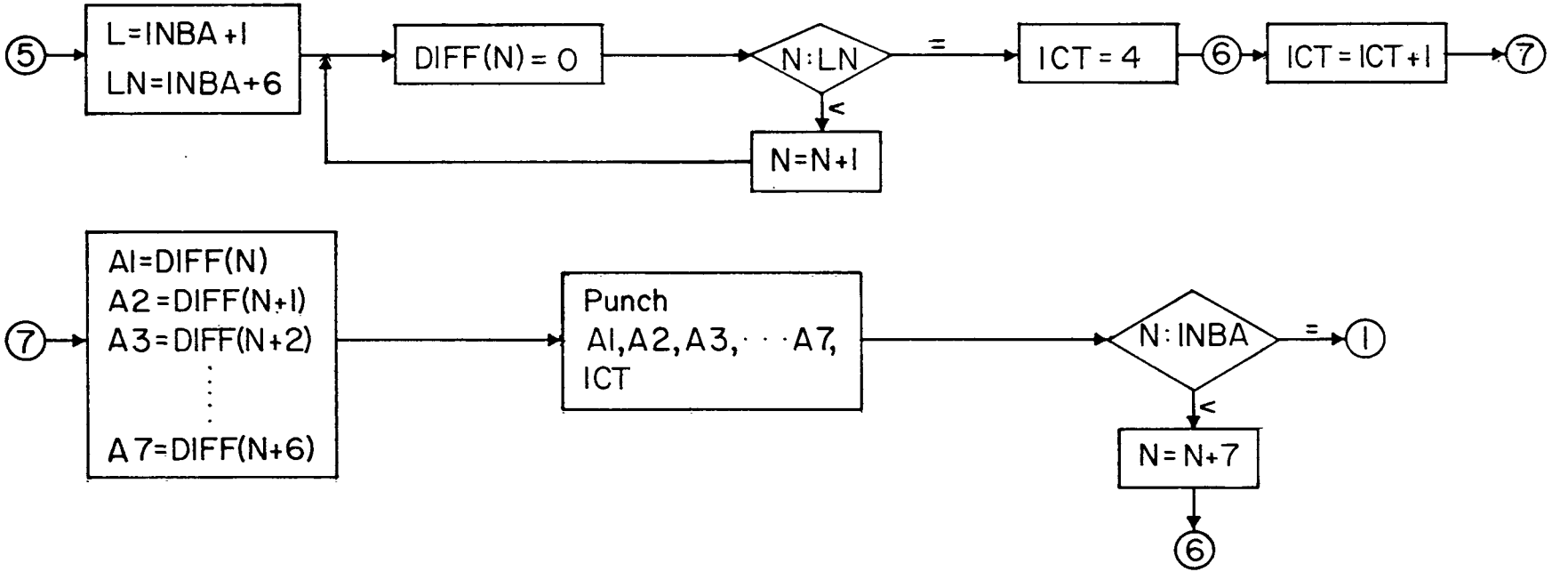
⑤
L=INBA+1
LN=INBA+6
DIFF(N)=0
N:LN
=
ICT=4
⑥
ICT=ICT+1
⑦
<
N=N+1
⑦
A1=DIFF(N)
A2=DIFF(N+1)
A3=DIFF(N+2)
A7=DIFF(N+6)
Punch
A1,A2,A3,···A7,
ICT
N:INBA
=
①
<
N=N+7
⑥

```
C                    PSI011E
C      DIFFERENTIATION - EMPIRICAL FUNCTION
       DIMENSION DATA(800), DIFF(800)
   21  READ 2, JA,JB,JC,JD,AE,AF,JG,AH,AI,IONE
    2  FORMAT (4I5, F9.0,F8.0,I4,F10.4,F10.0,17X,I2)
       READ 3, AK,JL,AM,AN,AO,AR,AS,ITWO
    3  FORMAT (F10.4,I5,F10.4,F10.0,F10.4,F8.4,F10.4,15X,I2)
       READ 4, BA,BC,BD,BE,BF,BG,ITHREE
    4  FORMAT (F10.4,F10.0,F10.8,F10.0,F10.4,F10.0,18X,I2)
       READ 5, BH,BI,BJ,JF,JE,IFOUR
    5  FORMAT (2F10.4,F6.0,2I5,42X,I2)
       BF=BF-.5*BD
       JB=JB+1110
       PUNCH 2, JA,JB,JC,JD,AE,AF,JG,AH,AI,IONE
       PUNCH 3, AK,JL,AM,AN,AO,AR,AS,ITWO
       PUNCH 4, BA,BC,BD,BE,BF,BG,ITHREE
       PUNCH 5, BH,BI,BJ,JF,JE,IFOUR
       INBA=JF
       TIME=BD
    9  READ 11, (DATA(N), N=1,INBA)
   11  FORMAT (7E10.4)
       A=3./(TIME*10.0)
       B=1./(TIME*10.0)
       DIFF(1)=0.0
       DIFF(2)=B*DATA(2)+A*DATA(3)
       INX=INBA-1
       DO 13 N=3,INX
   13  DIFF(N)=A*(DATA(N+1)-DATA(N-2))+B*(DATA(N)-DATA(N-1))
       BRAC=.8*DATA(JF)-.4*DATA(JF-1)-.6*DATA(JF-2)+.2*DATA(JF-3)
       DIFF(JF)=BRAC/TIME
       L =INBA+1
       LN=INBA+6
       DO 14 N=L,LN
   14  DIFF(N)=0.0
       ICT=4
       DO 15 N=1,INBA,7
       ICT=ICT+1
       A1=DIFF(N)
       A2=DIFF(N+1)
       A3=DIFF(N+2)
       A4=DIFF(N+3)
       A5=DIFF(N+4)
       A6=DIFF(N+5)
       A7=DIFF(N+6)
   15  PUNCH 17,A1,A2,A3,A4,A5,A6,A7,ICT
   17  FORMAT (7E10.4,7X,I3)
       GO TO 21
       END
```

Data Values For Figure I

```
INPUT          PSI011  AND  PSI011E

 9999 2222 3333                        989                                      01
                                                                                02
                      .31415900                                                 03
                            0020                                                04
 .0        .27178    .65917    .76687    .96229   1.07154   1.04999            05
 .84045    .50940    .34536    .09776   -.23169   -.60698   -.87512            06
-1.00455  -.90177   -1.05051  -.82942   -.56123   -.21301                       7


OUTPUT         PSI011E

 9999 3332 3333    0        0.       0. 989    0.0000        0.                 1
    0.0000    0    0.0000         0.    0.0000  0.0000    0.0000                2
    0.0000         0. .31415900        0.    -.1570        0.                   3
    0.000    0.0000    0.    20    0                                            4
 .0000E-99 .7159E-00 .8556E-00 .6936E-00 .4559E-00 .3051E-00-.1232E-00          5
-.6035E-00-.7782E-00-.7614E-00-.7865E-00-.1014E+01-.1048E+01-.8233E-00          6
-.3227E-00-.1347E-00 .1198E-00 .3955E-00 .8851E-00 .1087E+01 .0000E-99          7


OUTPUT         PSI011

 PSI011  1/22/63
 9999 2222 3333   NOTE =  989
    N  DERIVATIVE
    3  8.8863340E-01
    5  1.3004783E+00
    7  2.7463386E-01
    9  6.5510987E-01
   11  3.5155702E-01
   13 -5.8978112E-02
   15 -6.7433653E-01
   17 -1.1033886E+00
   19 -4.7711519E-01
   21 -7.9161516E-01
   23 -1.0522151E+00
   25 -1.2184344E+00
   27 -8.5496660E-01
   29 -4.3392658E-01
   31  4.1641729E-01
   33 -5.8643877E-01
   35  7.6594849E-01
   37  8.4029890E-01
```

Data Values For Figure II

```
INPUT          PSI011E     7250 0 2 0

 7250    0 2222    0          .         . 60    8.2100          .                  001
    8.2100   58    4.0200 62454362.   10.0000   .0090 6245.4362                   002
   31.0000 62454362. .03222222 62454362.     .9666 62454362.                     003
  999.0000 2126.0500 4354.  529    0                                              004
 .0000E-99 .9528E-02 .9528E-02-.6352E-02-.3811E-01-.5399E-01-.3811E-01            005
 .1588E-01 .7622E-01 .1175E-00 .1111E-00 .7940E-01 .4446E-01 .3176E-02            006
 .4446E-01 .7622E-01 .6669E-01 .6669E-01 .3811E-01-.3176E-01-.4446E-01            007
 .1270E-01 .6034E-01 .2540E-01-.5717E-01-.1111E-00-.2000E-00-.2382E-00            008
-.2445E-00-.1937E-00-.1016E-00-.3493E-01-.6352E-02 .9528E-02-.9528E-02            009
-.4764E-01-.6669E-01-.4446E-01-.9528E-02 .1588E-01 .4764E-01 .9528E-01            010
 .1429E-00 .1715E-00 .1905E-00 .2000E-00 .1778E-00 .1175E-00 .6352E-01            011
-.3176E-02-.7305E-01-.1429E-00-.1778E-00-.1810E-00-.1461E-00-.9528E-01            012
-.3811E-01 .1588E-01 .5399E-01 .8257E-01 .1270E-00 .1683E-00 .2096E-00            013
 .2350E-00 .2477E-00 .2540E-00 .2604E-00 .2445E-00 .1905E-00 .1333E-00            014
 .7940E-01 .3176E-01-.6352E-02-.3176E-01-.5717E-01-.8893E-01-.1143E-00            015
-.1333E-00-.1588E-00-.1683E-00-.1524E-00-.1270E-00-.1270E-00-.1461E-00            016
-.1778E-00-.2191E-00-.2509E-00-.2826E-00-.2953E-00-.2826E-00-.2477E-00            017
-.2096E-00-.1651E-00-.1111E-00-.4446E-01 .2223E-01 .8575E-01 .1429E-00            018
 .1873E-00 .2191E-00 .2477E-00 .2540E-00 .2509E-00 .2318E-00 .2064E-00            019
 .1651E-00 .1270E-00 .8575E-01 .4764E-01 .0000E-99-.3176E-01-.6034E-01            020
-.8575E-01-.9528E-01-.8575E-01-.6987E-01-.4446E-01-.1905E-01 .3176E-02            021
 .2223E-01 .2540E-01 .1270E-01 .0000E-99-.2540E-01-.5399E-01-.7622E-01            022
-.9528E-01-.9846E-01-.8893E-01-.7940E-01-.5399E-01-.2223E-01 .0000E-99            023
 .2223E-01 .4128E-01 .5081E-01 .5717E-01 .5717E-01 .6034E-01 .5081E-01            024
 .4128E-01 .3176E-01 .2858E-01 .1588E-01 .6352E-02-.6352E-02-.1905E-01            025
-.3493E-01-.3811E-01-.4764E-01-.5717E-01-.5717E-01-.5081E-01-.4764E-01            026
-.3176E-01-.1270E-01 .3176E-02 .1270E-01 .6352E-02 .3176E-02 .0000E-99            027
 .6352E-02 .9528E-02 .2223E-01 .2858E-01 .3176E-01 .2858E-01 .2540E-01            028
 .2540E-01 .2540E-01 .1905E-01 .1270E-01 .6352E-02 .3176E-02 .0000E-99            029
 .0000E-99 .0000E-99-.3176E-02 .0000E-99 .6352E-02 .2223E-01 .3811E-01            030
 .5399E-01 .6669E-01 .7622E-01 .7940E-01 .7622E-01 .6669E-01 .4764E-01            031
 .2540E-01-.3176E-02-.3176E-01-.4764E-01-.6669E-01-.7622E-01-.8893E-01            032
-.9210E-01-.9210E-01-.8893E-01-.7940E-01-.7305E-01-.6352E-01-.4764E-01            033
-.3176E-01-.2223E-01-.6352E-02 .3176E-02 .1905E-01 .3176E-01 .3811E-01            034
 .3811E-01 .4128E-01 .4128E-01 .4446E-01 .4764E-01 .4764E-01 .4128E-01            035
 .3176E-01 .1588E-01 .6352E-02-.1270E-01-.2223E-01-.3176E-01-.3176E-01            036
-.3176E-01-.3176E-01-.2858E-01-.3176E-01-.2540E-01-.2223E-01-.1588E-01            037
-.1270E-01-.1270E-01-.6352E-02 .0000E-99 .3176E-02 .3176E-02-.3176E-02            038
-.9528E-02-.1270E-01-.1270E-01-.1270E-01-.1905E-01-.2223E-01-.2858E-01            039
-.2223E-01-.2223E-01-.1270E-01-.6352E-02 .6352E-02 .9528E-02 .1588E-01            040
 .1588E-01 .1270E-01 .9528E-02 .3176E-02-.3176E-02-.1270E-01-.2223E-01            041
-.2858E-01-.3176E-01-.3176E-01-.2858E-01-.2858E-01-.2223E-01-.1270E-01            042
-.1270E-01-.6352E-02 .3176E-02 .6352E-02 .9528E-02 .9528E-02 .9528E-02            043
 .6352E-02 .3176E-02-.6352E-02-.1270E-01-.1588E-01-.2223E-01-.2540E-01            044
-.2540E-01-.2858E-01-.2858E-01-.2858E-01-.2858E-01-.2858E-01-.2223E-01            045
-.1588E-01-.9528E-02-.6352E-02-.6352E-02-.6352E-02-.6352E-02-.3176E-02            046
-.3176E-02 .0000E-99 .3176E-02 .6352E-02 .6352E-02 .0000E-99 .0000E-99            047
-.3176E-02-.6352E-02-.9528E-02-.1270E-01-.1588E-01-.2223E-01-.2540E-01            048
-.3176E-01-.3176E-01-.3176E-01-.2858E-01-.2540E-01-.2223E-01-.1588E-01            049
-.9528E-02-.6352E-02 .3176E-02 .3176E-02 .3176E-02 .1270E-01 .1588E-01            050
 .1905E-01 .1588E-01 .1588E-01 .1270E-01 .1905E-01 .1588E-01 .1588E-01            051
 .1588E-01 .1270E-01 .6352E-02 .3176E-02-.3176E-02-.9528E-02-.1905E-01            052
-.2858E-01-.3493E-01-.4764E-01-.5399E-01-.5717E-01-.6034E-01-.5399E-01            053
-.5399E-01-.5081E-01-.4128E-01-.3811E-01-.3176E-01-.2540E-01-.1905E-01            054
-.9528E-02 .0000E-99 .6352E-02 .1270E-01 .1588E-01 .2223E-01 .1905E-01            055
 .1905E-01 .1588E-01 .9528E-02 .0000E-99 .0000E-99-.9528E-02-.1588E-01            056
-.2223E-01-.2858E-01-.3811E-01-.3811E-01-.3811E-01-.3493E-01-.3176E-01            057
-.2223E-01-.1588E-01-.6352E-02 .3176E-02 .1588E-01 .2223E-01 .2858E-01            058
```

```
 .3811E-01 .3811E-01 .4128E-01 .3493E-01 .2858E-01 .2223E-01 .1588E-01        059
 .9528E-02 .0000E-99-.9528E-02-.2223E-01-.3176E-01-.3176E-01-.3811E-01        060
-.3811E-01-.3493E-01-.3811E-01-.3493E-01-.3493E-01-.3811E-01-.3493E-01        061
-.2858E-01-.2858E-01-.3176E-01-.2858E-01-.2540E-01-.2223E-01-.1588E-01        062
-.1588E-01-.6352E-02-.6352E-02 .0000E-99 .3176E-02 .9528E-02 .1588E-01        063
 .1905E-01 .2540E-01 .2540E-01 .3176E-01 .3811E-01 .3493E-01 .2540E-01        064
 .2223E-01 .1588E-01 .9528E-02 .0000E-99-.6352E-02-.1270E-01-.2223E-01        065
-.2540E-01-.3493E-01-.3811E-01-.4128E-01-.4128E-01-.4128E-01-.3176E-01        066
-.3176E-01-.3176E-01-.2223E-01-.1905E-01-.1270E-01-.6352E-02 .0000E-99        067
 .3176E-02 .9528E-02 .9528E-02 .9528E-02 .9528E-02 .9528E-02 .3176E-02        068
 .3176E-02 .3176E-02 .3176E-02-.3176E-02 .0000E-99 .0000E-99-.3176E-02        069
 .0000E-99 .0000E-99 .3176E-02 .6352E-02 .9528E-02 .9528E-02 .6352E-02        070
 .6352E-02 .6352E-02 .9528E-02 .9528E-02 .9528E-02 .9528E-02 .9528E-02        071
 .6352E-02 .0000E-99-.3176E-02-.6352E-02-.1270E-01-.1905E-01-.2223E-01        072
-.2540E-01-.2858E-01-.3176E-01-.3176E-01-.2858E-01-.2540E-01-.1905E-01        073
-.1588E-01-.9528E-02 .3176E-02 .3176E-02 .1270E-01 .1905E-01 .2540E-01        074
 .2858E-01 .3176E-01 .3176E-01 .3176E-01 .3176E-01 .3176E-01 .2858E-01        075
 .2223E-01 .2223E-01 .1905E-01 .1270E-01 .9528E-02 .3176E-02 .0000E-99        076
 .0000E-99-.6352E-02-.1270E-01-.1588E-01-.1588E-01-.2223E-01-.1905E-01        077
-.1588E-01-.1588E-01-.9528E-02 .0000E-99 .3176E-02 .6352E-02 .9528E-02        078
 .1270E-01 .1588E-01 .2540E-01 .1905E-01 .2223E-01 .2223E-01 .2223E-01        079
 .2223E-01 .1588E-01 .1588E-01 .1588E-01 .0000E-99 .0000E-99 .0000E-99        080
```

```
OUTPUT          PSI011E     7250 0 2 0  DIFFERENTIATED TWICE

 7250 2220 2222    0        0.      0.  60    8.2100        0.                1
    8.2100   58    4.0200 62454362.   10.0000   .0090 6245.4362                2
   31.0000 62454362. .03222222 62454362.      .9342 62454362.                 3
  999.0000 2126.0500 4354.  529    0                                          4
 .0000E-99-.1836E-00-.5138E+01-.8869E+01-.3272E+01 .1079E+02 .2204E+02        5
 .2100E+02 .5099E+01-.1467E+02-.2559E+02-.2224E+02-.5350E+01 .1323E+02        6
 .1950E+02 .6697E+01-.8839E+01-.1743E+02-.1531E+02-.2886E-01 .2200E+02        7
 .2314E+02-.5228E+01-.3170E+02-.3191E+02-.1247E+02 .5524E+01 .2331E+02        8
 .3590E+02 .3779E+02 .2030E+02-.3733E+01-.2072E+02-.2489E+02-.2042E+02        9
-.7430E+01 .9451E+01 .1838E+02 .1370E+02 .6237E+01 .4644E+01 .4180E+01       10
-.1012E+01-.7893E+01-.1247E+02-.1760E+02-.2165E+02-.2026E+02-.1270E+02       11
-.6740E+01-.3941E-00 .9000E+01 .2179E+02 .2864E+02 .2705E+02 .1795E+02       12
 .6946E+01-.2696E+01-.6213E+01-.3671E+01 .8875E-00 .4282E-00-.4124E+01       13
-.8959E+01-.9298E+01-.8318E+01-.1100E+02-.1690E+02-.1806E+02-.1048E+02       14
-.6982E-00 .5834E+01 .7788E+01 .6354E+01 .2846E+01 .1050E+01 .1533E+01       15
 .2897E+01 .5797E+01 .1098E+02 .1144E+02 .2841E+01-.9426E+01-.1504E+02       16
-.1212E+02-.5501E+01 .1467E+01 .7981E+01 .1485E+02 .1812E+02 .1608E+02       17
 .1067E+02 .8048E+01 .7789E+01 .6625E+01 .2473E+01-.2501E+01-.6849E+01       18
-.9111E+01-.1029E+02-.1103E+02-.1268E+02-.1275E+02-.1217E+02-.9966E+01       19
-.7576E+01-.3625E+01-.1772E+01-.2451E-00 .1281E+01 .4273E+01 .5984E+01       20
 .8464E+01 .1116E+02 .1247E+02 .1006E+02 .5964E+01 .1741E+01-.2326E+01       21
-.6821E+01-.9877E+01-.1024E+02-.8257E+01-.5720E+01-.2235E+01 .2354E+01       22
 .7003E+01 .9420E+01 .9483E+01 .8535E+01 .6943E+01 .3547E+01-.5524E-00       23
-.3213E+01-.4343E+01-.5136E+01-.4708E+01-.4007E+01-.3641E+01-.3975E+01       24
-.2108E+01-.4571E-00 .1530E-00-.1192E+01-.1345E+01-.1406E+01-.9217E-01       25
 .1069E+01 .1955E+01 .1406E+01 .2386E+01 .3762E+01 .4649E+01 .4465E+01       26
 .4435E+01 .2416E+01-.2050E+01-.5933E+01-.6207E+01-.2354E+01 .1284E+01       27
 .3485E+01 .2813E+01 .1467E+01-.1437E+01-.3149E+01-.3089E+01-.1009E+01       28
-.6042E-01-.7323E-00-.1803E+01-.1191E+01 .1840E-00 .1314E+01 .1466E+01       29
 .1038E+01 .5505E-00 .9786E-00 .2905E+01 .4434E+01 .4404E+01 .2202E+01       30
-.1831E-00-.2324E+01-.3792E+01-.5107E+01-.6117E+01-.6576E+01-.6422E+01       31
-.5261E+01-.2538E+01 .9173E-00 .3701E+01 .3822E+01 .3577E+01 .3364E+01       32
```

```
 .4221E+01 .4250E+01 .3790E+01 .2630E+01 .1989E+01 .2325E+01 .1989E+01   33
 .8258E-00-.6126E-00-.3066E-00 .3103E-01-.1225E-00-.2141E+01-.3456E+01   34
-.3364E+01-.1437E+01-.1206E-00 .3077E-00-.8260E-00-.2508E+01-.4098E+01   35
-.3699E+01-.2722E+01-.1040E+01-.1241E-02 .2293E+01 .3578E+01 .3945E+01   36
 .2478E+01 .1009E+01 .3981E-00 .5810E-00 .1467E+01 .1068E+01 .1226E-00   37
-.7634E-00-.3069E-01 .7942E-00 .1836E-00-.1773E+01-.3240E+01-.2813E+01   38
-.7338E-00 .1223E+01 .1223E+01-.1839E-00-.1346E+01-.6166E-01 .1529E+01   39
 .3058E+01 .2508E+01 .2569E+01 .1253E+01 .2442E-00-.1743E+01-.2354E+01   40
-.2905E+01-.2507E+01-.2017E+01-.1589E+01-.1467E+01-.1039E+01 .2746E-00   41
 .1772E+01 .2782E+01 .2508E+01 .1866E+01 .1712E+01 .1528E+01 .5807E-00   42
-.9186E-01 .3357E-00 .2144E-00-.1069E+01-.1926E+01-.1865E+01-.1468E+01   43
-.1865E+01-.1926E+01-.1345E+01 .3134E-01 .7650E-00 .9794E-00 .1039E+01   44
 .1038E+01 .7021E-00 .5810E-00 .4593E-00 .8260E-00 .1467E+01 .2078E+01   45
 .1192E+01-.4578E-00-.1772E+01-.1773E+01-.7341E-00 .1835E-00 .5811E-00   46
 .4282E-00 .5812E-00 .1835E-00-.1009E+01-.1957E+01-.1621E+01-.3976E-00   47
-.1223E-00-.1831E-00-.2750E-00-.2751E-00-.4583E-00-.5801E-00 .1222E-00   48
 .8853E-00 .1895E+01 .1928E+01 .1591E+01 .1007E+01 .1006E+01 .7638E-00   49
 .5514E-00-.1213E-00-.8559E-00-.1100E+01-.9310E-04 .8249E-00-.4279E-00   50
-.1834E+01-.2170E+01-.3372E-00 .5194E-00 .7345E-00-.4574E-00-.6119E-00   51
-.1101E+01-.1223E+01-.1313E+01-.7029E-00-.8565E-00-.1192E+01-.1039E+01   52
-.5511E-00-.1545E-00 .3963E-00 .1621E+01 .2784E+01 .2936E+01 .2202E+01   53
 .1407E+01 .1315E+01 .1069E+01 .3963E-00 .1222E-00 .4586E-00 .1008E+01   54
 .7637E-00 .0000E-99-.1039E+01-.1192E+01-.1406E+01-.1621E+01-.2201E+01   55
-.1895E+01-.2139E+01-.1406E+01-.6738E-00 .1824E-00-.4580E-00-.3351E-00   56
-.3662E-00 .3662E-00 .1160E+01 .2660E+01 .2661E+01 .2415E+01 .1925E+01   57
 .1896E+01 .1163E+01 .1132E+01 .6424E-00-.1533E-00-.1071E+01-.1284E+01   58
-.1437E+01-.2477E+01-.3089E+01-.3209E+01-.1925E+01-.8248E-00-.2755E-00   59
-.7352E-00-.1316E+01-.1193E+01 .2448E-00 .1957E+01 .2661E+01 .2141E+01   60
 .1620E+01 .1039E+01 .3972E-00-.1224E-00-.3061E-00 .5197E-00 .1253E+01   61
 .4889E-00-.9789E-00-.7639E-00 .7962E-00 .1467E+01 .7321E-00 .3970E-00   62
 .3134E-01 .2758E-00-.2749E-00 .2454E-00 .3364E-00 .5806E-00-.9310E-03   63
-.5818E-00-.6110E-00-.1514E-00 .6206E-01-.1836E+01-.3487E+01-.3088E+01   64
-.9458E-00-.3966E-00-.6427E-00-.5818E-00 .3072E-01 .2755E-00 .1523E-00   65
 .4273E-00 .5803E-00 .1437E+01 .1652E+01 .2415E+01 .2108E+01 .1191E+01   66
-.9062E-01 .2777E-00 .1102E+01 .8557E-00 .3956E-00-.9279E-01-.1827E-00   67
-.8553E-00-.1161E+01-.1621E+01-.1192E+01-.1101E+01-.9176E-00-.6117E-00   68
 .6117E-00 .3671E-00-.9180E-01-.1529E-00 .6422E-00 .4282E-00 .2446E-00   69
 .6116E-00 .8870E-00 .8564E-00 .1835E-00-.7340E-00-.1498E+01-.1039E+01   70
 .3058E-00 .9175E-00 .5810E-00-.3058E-00-.4587E-00-.5504E-00-.1009E+01   71
-.1498E+01-.1039E+01-.2436E-00-.2743E-00-.4891E-00-.1241E-02 .7632E-00   72
 .7332E-00 .5494E-00 .1009E+01 .1775E+01 .2051E+01 .1467E+01 .8542E-00   73
 .9772E-00 .9487E-00 .4285E-00-.4897E-00-.6206E-03-.2138E-00-.6405E-00   74
-.1588E+01-.1467E+01-.1316E+01-.7350E-00-.5511E-00-.1009E+01-.1223E+01   75
-.5808E-00 .6107E-01-.3052E-00-.7632E-00-.4271E-00 .4274E-00 .7635E-00   76
 .3060E-01-.7945E-00-.1837E-00 .6718E-00 .1131E+01 .1132E+01 .1651E+01   77
 .1466E+01 .1528E+01 .1529E+01 .7651E-00-.7945E-00-.1192E+01-.5508E-00   78
 .5497E-00 .9145E-01-.7645E-00-.1803E+01-.7331E-00-.2141E-00-.4594E-00   79
-.1192E+01-.6115E-00 .9784E-00 .2813E+01 .0000E-99 .0000E-99 .0000E-99   80
```

7250 2 2 1 OBSERVED

```
 7250 2222 2222 1111          .       .  60   60.8000 43542147.          001
  114.2000  356     .1466 62454362.   11.0000  -.0240 6245.4362          002
   70.0000 62454362. .01428571 62454362.     .8999 62454362.            003
  999.0000 2126.0500 4354.  498    0                                     004
 .0000E-99 .8577E-03 .1286E-02 .1286E-02 .1286E-02 .0000E-99-.1715E-02   005
-.3431E-02-.1286E-02 .6433E-02 .2058E-01 .3045E-01 .3516E-01 .3002E-01   006
```

```
 .1458E-01-.8148E-02-.2616E-01-.3516E-01-.5318E-01-.6090E-01-.6561E-01  007
-.5961E-01-.3859E-01-.8577E-02 .2744E-01 .4546E-01 .6561E-01 .7505E-01  008
 .7076E-01 .5318E-01 .3859E-01 .3002E-01 .2058E-01 .1715E-02-.2230E-01  009
-.6905E-01-.9778E-01-.9006E-01-.4245E-01 .3045E-01 .6947E-01 .5618E-01  010
 .2358E-01 .4288E-02 .2444E-01 .6047E-01 .7333E-01 .5361E-01-.7291E-02  011
-.5704E-01-.9692E-01-.1127E-00-.9864E-01-.5918E-01 .2144E-02 .8448E-01  012
 .1350E-00 .1428E-00 .1188E-00 .8920E-01 .5017E-01 .1801E-01-.1715E-01  013
-.3645E-01-.4374E-01-.4589E-01-.4160E-01-.3988E-01-.5918E-01-.8148E-01  014
-.9306E-01-.8792E-01-.5361E-01-.2701E-01 .2230E-01 .4846E-01 .5918E-01  015
 .5575E-01 .4031E-01 .3130E-01 .3473E-01 .4288E-01 .4160E-01 .3516E-01  016
 .2187E-01 .1286E-02-.3216E-01-.5446E-01-.6819E-01-.6047E-01-.3559E-01  017
-.1029E-01 .9435E-02 .2015E-01 .1200E-01-.3859E-02-.2358E-01-.3045E-01  018
-.2701E-01-.1286E-01 .1286E-01 .2058E-01 .2015E-01 .1672E-01 .1286E-01  019
 .1672E-01 .3045E-01 .3645E-01 .4932E-01 .5961E-01 .5618E-01 .4417E-01  020
 .3045E-01 .1887E-01 .1929E-01 .2058E-01 .1887E-01 .1072E-01 .1715E-02  021
-.7291E-02-.2058E-01-.2830E-01-.3559E-01-.4160E-01-.5275E-01-.5918E-01  022
-.5961E-01-.5403E-01-.4288E-01-.3431E-01-.2058E-01-.1200E-01 .4288E-03  023
 .9006E-02 .2315E-01 .3173E-01 .3259E-01 .2273E-01 .2144E-02-.1672E-01  024
-.2916E-01-.3087E-01-.1801E-01-.3002E-02 .1157E-01 .2273E-01 .2916E-01  025
 .2273E-01 .1372E-01 .1115E-01 .1072E-01 .9864E-02 .6004E-02 .4288E-02  026
 .1157E-01 .2358E-01 .4288E-01 .5275E-01 .4932E-01 .2701E-01 .9006E-02  027
-.5146E-02-.1072E-01-.1072E-01-.1072E-01-.1286E-01-.1501E-01-.1501E-01  028
-.1286E-01-.1243E-01-.6862E-02 .1286E-02 .8148E-02 .1072E-01 .8148E-02  029
 .4717E-02-.2144E-02-.3859E-02-.2144E-02 .2573E-02 .4288E-02-.2573E-02  030
-.1629E-01-.3345E-01-.4245E-01-.4117E-01-.2744E-01-.9006E-02 .1243E-01  031
 .3216E-01 .3645E-01 .3559E-01 .3388E-01 .3431E-01 .3259E-01 .2530E-01  032
 .1586E-01 .3002E-02-.3002E-02-.9435E-02-.1329E-01-.1715E-01-.1887E-01  033
-.2230E-01-.3002E-01-.3516E-01-.3731E-01-.3602E-01-.3045E-01-.2058E-01  034
-.1501E-01-.1458E-01-.1501E-01-.1501E-01-.1415E-01-.1243E-01-.1157E-01  035
-.9864E-02-.6004E-02-.4288E-02-.3859E-02-.2144E-02 .1286E-02 .4717E-02  036
 .7719E-02 .1072E-01 .1329E-01 .1372E-01 .1286E-01 .1329E-01 .1715E-01  037
 .2358E-01 .2616E-01 .2744E-01 .2573E-01 .2315E-01 .2058E-01 .1758E-01  038
 .1629E-01 .1715E-01 .1929E-01 .2187E-01 .2273E-01 .1629E-01 .8148E-02  039
 .3002E-02 .3002E-02 .4288E-02 .6433E-02 .6433E-02 .2573E-02-.8577E-03  040
-.5575E-02-.9435E-02-.9006E-02-.8148E-02-.6862E-02-.8577E-02-.1115E-01  041
-.1672E-01-.2101E-01-.2144E-01-.1801E-01-.1501E-01-.1115E-01-.1072E-01  042
-.1243E-01-.1243E-01-.1072E-01-.5575E-02 .1715E-02 .7291E-02 .1243E-01  043
 .1758E-01 .2273E-01 .2616E-01 .2873E-01 .2701E-01 .2144E-01 .1672E-01  044
 .1157E-01 .8577E-02 .8148E-02 .8148E-02 .7719E-02 .6433E-02 .1286E-02  045
-.6004E-02-.1115E-01-.1501E-01-.1758E-01-.1715E-01-.1543E-01-.1415E-01  046
-.1286E-01-.1243E-01-.1415E-01-.1501E-01-.1372E-01-.1115E-01-.5146E-02  047
-.8577E-03 .2573E-02 .4288E-02 .6004E-02 .7719E-02 .9006E-02 .1200E-01  048
 .1329E-01 .1072E-01 .9435E-02 .7719E-02 .6004E-02 .6004E-02 .6862E-02  049
 .6433E-02 .6862E-02 .8148E-02 .8148E-02 .6433E-02 .5575E-02 .4717E-02  050
 .3431E-02 .1715E-02 .8577E-03 .1286E-02 .3002E-02 .4717E-02 .6433E-02  051
 .7291E-02 .6004E-02 .2144E-02 .4288E-03 .4288E-03 .2573E-02 .5575E-02  052
 .5146E-02 .3859E-02 .2573E-02 .0000E-99-.2144E-02-.3431E-02-.4288E-02  053
-.5146E-02-.6433E-02-.6862E-02-.7719E-02-.7291E-02-.6862E-02-.6862E-02  054
-.7719E-02-.8148E-02-.7291E-02-.6433E-02-.5146E-02-.2144E-02 .3859E-02  055
 .1029E-01 .1501E-01 .1758E-01 .1629E-01 .1200E-01 .9435E-02 .5575E-02  056
 .2144E-02-.1286E-02-.3859E-02-.6862E-02-.8148E-02-.8148E-02-.7719E-02  057
-.5146E-02-.2144E-02 .1715E-02 .3859E-02 .6433E-02 .9006E-02 .9006E-02  058
 .8577E-02 .5575E-02 .3002E-02-.4288E-03-.1286E-02-.4288E-03 .1715E-02  059
 .5146E-02 .6433E-02 .7719E-02 .6433E-02 .4717E-02 .3431E-02 .2144E-02  060
 .2573E-02 .0000E-99-.2144E-02-.2573E-02-.3431E-02-.3002E-02-.3002E-02  061
-.2573E-02-.4288E-03 .1715E-02 .2144E-02 .1715E-02-.4288E-03-.2144E-02  062
-.4717E-02-.6862E-02-.9435E-02-.9435E-02-.9006E-02-.7719E-02-.4717E-02  063
-.2573E-02-.8577E-03 .1286E-02 .2573E-02 .4288E-02 .5575E-02 .6433E-02  064
 .6862E-02 .9006E-02 .1072E-01 .1243E-01 .1372E-01 .1458E-01 .1501E-01  065
 .1458E-01 .1415E-01 .1243E-01 .1200E-01 .9006E-02 .5146E-02 .3002E-02  066
```

```
 .1286E-02-.8577E-03-.1286E-02-.1286E-02-.2144E-02-.3002E-02-.5575E-02        067
-.7719E-02-.7719E-02-.7291E-02-.5146E-02-.3431E-02-.2144E-02-.2573E-02        068
-.3859E-02-.6433E-02-.6862E-02-.6862E-02-.6433E-02-.5575E-02-.5575E-02        069
-.5575E-02-.5575E-02-.6004E-02-.5575E-02-.3859E-02-.2144E-02 .0000E-99        070
 .8577E-03 .8577E-03 .1715E-02 .8577E-03 .0000E-99 .4288E-03 .8577E-03        071
 .4288E-03 .0000E-99 .4288E-03 .1715E-02 .3431E-02 .5146E-02 .5575E-02        072
 .5575E-02 .4717E-02 .4288E-02 .3859E-02 .3431E-02 .2144E-02 .0000E-99        073
-.8577E-03-.1715E-02-.2144E-02-.1286E-02-.4288E-03 .1715E-02 .4288E-02        074
 .6004E-02 .8577E-02 .1029E-01 .1072E-01 .8577E-02 .6862E-02 .5146E-02        075
 .3859E-02 .0000E-99 .0000E-99 .0000E-99 .0000E-99 .0000E-99 .0000E-99        076
```

FIGURE II IS A PLOT OF ONLY THE FIRST PORTION OF THE ABOVE OUTPUT AND OBSERVED

COMPUTER PROGRAM DESCRIPTION

PSI012 Smoothing by Fourth Differences IBM 1620

By Nancy L. Nuhn

PURPOSE:

To correct for random errors of seismic data traces by smoothing.

RESULT:

A smoothed seismic data trace. Any number of traces may be handled.

REQUIREMENTS:

1. Core storage of at least 40,000 digits.
2. The number of readings must not exceed 500 for each trace. This number may be increased (within the limits of the memory of the IBM 1620) by changing the number in the dimension statement of Fortran deck and recompiling.
3. The form of input for the digital data is described in the section on input.

INPUT:

The form of input for the digital data must be identical with that described in the "output" section for computer program PSI002REV (Semi-Annual Report to United States Coast and Geodetic Survey, by Planetary Sciences, Inc., 31 December, 1962). The readings are referred to by the variable name AMP in the program. They are read in floating

point with a format E10.4.

METHOD:

Computations are done in floating point using the method of smoothing of data by fourth differences.
(Reference: Lanczos, C., Applied Analysis, 1956, p. 309, pp. 316-320)

$$\bar{y}_n = y_n - (3/35)\delta^4 y_n$$

where:

$\bar{y}_n$ = the smoothed data value referred to as the variable name SAMP in this program,

y_n = the actual data value referred to as the variable name AMP in this program,

$\delta^4 y_n$ = the variable name DIFF in this program.

This equation will correct all data values excluding the first two and last two data points, ie: to smooth a value by fourth differences there must be two points to the left and right of the value.

The first data point will always be set to zero.

The second data point is smoothed through the use of the following equation:

$$\bar{y}_2 = y_2 - (2/5)\delta^3 y_\alpha - (1/7)\delta^4 y_\alpha$$

where:

$\delta^3 y_\alpha$ = the closest 3rd difference,

and $\delta^4 y_\alpha$ = the closest 4th difference

in a difference table.

The next to the last point is corrected with:

$$\bar{y}_{INBA-1} = y_{INBA-1} + (2/5)\delta^3 y_\beta - (1/7)\delta^4 y_\beta$$

and, the last point:

$$\bar{y}_{INBA} = y_{INBA} - (1/5)\delta^3 y_\beta + (3/35)\delta^4 y_\beta$$

where:

INBA = total number of data values

$\delta^3 y_\beta$ = closest 3rd difference

and $\delta^4 y_\beta$ = closest 4th difference

in a difference table.

ANALYSIS:

It was anticipated that the original data would gradually be corrected to a point where the smoothing was no longer effective as in sample data points 28, 30, 34 and 36 in figures 1 and 2. (The original data was smoothed 4 times.) This would eliminate errors such as galvanometer string-whipping and reader random errors with no distortion of the actual or real motion of the trace.

However, as is evident in sample points 16, 17 and 18 of figures 1 and 2, the original data reading (minus its baseline) was corrected beyond the limits expected of random errors.

Until further investigation is done, it is recommended that PSI012 not be applied to the actual data traces.

POINT	ORIGINAL	1st	2nd	3rd	4th
16.	89.07	116.34	109.87	111.738	110.51
17.	64.00	21.15	21.24	14.89	12.74
18.	-122.1	-92.42	-99.01	-97.40	-98.70
21.	-186.41	-186.41	-181.83	-181.87	-180.01
22.	-104.08	-101.94	-103.92	-104.08	-106.02
23.	-25.02	-32.48	-36.40	-41.03	-44.21
26.	-77.05	-70.51	-67.77	-64.85	-62.68
28.	-64.04	-64.71	-66.81	-67.94	-68.84
30.	-67.04	-66.59	-66.19	-66.22	-66.64
32.	-51.04	-54.03	-54.22	-53.70	-52.97
34.	48.04	52.83	54.72	56.35	57.48
36.	216.20	216.86	215.23	215.54	215.35
40.	85.08	91.86	91.01	86.59	90.98
41.	4.003	-1.48	-0.2618	-0.3718	-00.00049

Figure 1

Actual data values (minus baseline) smoothed by fourth differences: one, two, three and four times.

	Δx	Δx_1	Δx_2	Δx_3
16.	27	-16	2	-2
17.	-43	0	-6	-2
18.	30	-7	2	-2
21.	0	4	-1	2
22.	2	-2	0	-2
23.	-7	-4	-5	-3
26.	7	2	3	2
28.	-1	-2	-1	-1
30.	0	1	0	-1
32.	-3	0	0	1
34.	5	3	1	1
36.	1	-2	0	0
40.	7	-1	-4	4
41.	-3	1	0	0

Δx = data - first smoothing values

Δx_1 = first smoothing - second smoothing values

Δx_2 = 2nd smoothing - 3rd smoothing

Δx_3 = 3rd smoothing - 4th smoothing

Figure 2

It is anticipated that PSI012 will be useful with other codes such as smoothing the output of codes forming the derivative of a trace.

OPERATING INSTRUCTIONS:

The operating procedures are identical to those described in computer Program Description PSI011.

OUTPUT:

All data values for AMP, SAMP, and DIFF are punched with a format of E10.4. There are no DIFF values punched for the first two and last two data points. The SAMP value for the first data point will always be zero. The results are numbered consecutively, one through INBA with a fixed point format of I4.

Following these results, the four format cards and the smoothed values for the original data (SAMP) are punched in the same format as the input, E10.4.

To run the same data trace through this program any number of times, reload the final output (4 format cards and the smoothed differences). A flow chart, test problem, and listing of the Fortran deck are presented on the following pages.

PSI 012

Smoothing—Fortran II

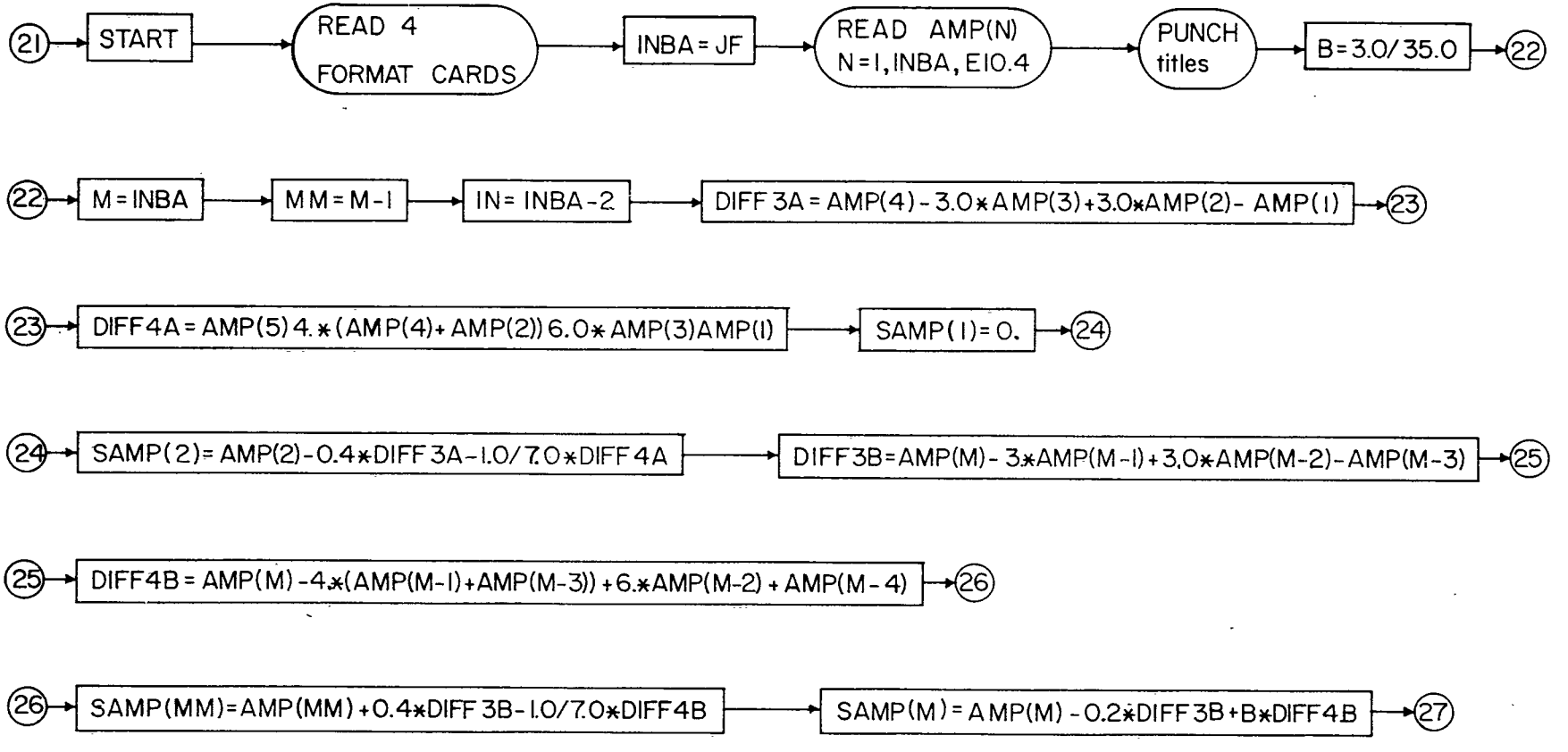

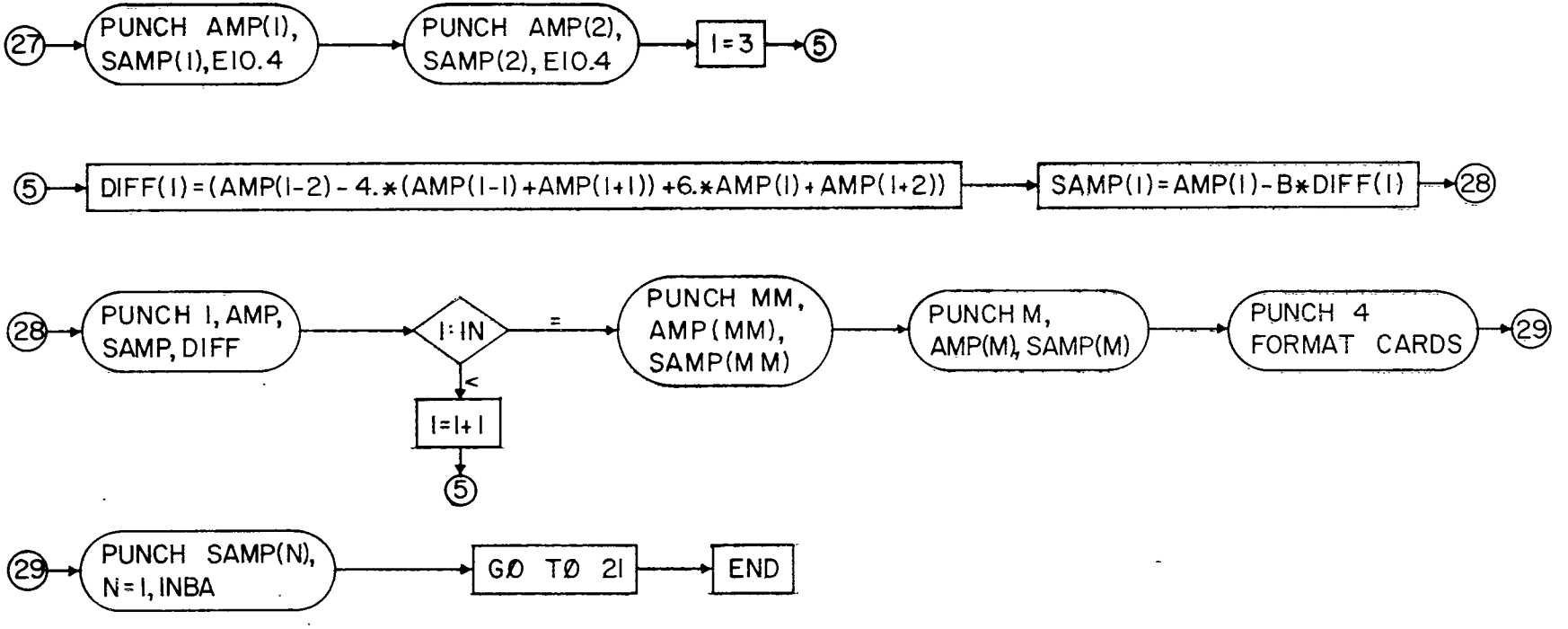
27
PUNCH AMP(I), SAMP(I),E10.4
PUNCH AMP(2), SAMP(2), E10.4
I=3
5
5
DIFF(I)=(AMP(I-2)-4.*(AMP(I-1)+AMP(I+1))+6.*AMP(I)+AMP(I+2))
SAMP(I)=AMP(I)-B*DIFF(I)
28
28
PUNCH I, AMP, SAMP, DIFF
I:IN
=
PUNCH MM, AMP(MM), SAMP(MM)
PUNCH M, AMP(M), SAMP(M)
PUNCH 4 FORMAT CARDS
29
<
I=I+1
5
29
PUNCH SAMP(N), N=1, INBA
GO TO 21
END

TEST PROBLEM

INPUT:

```
0 99999999999999                    0    0.0000         0.
0.0000      0   0.0000          0.     0.0000  0.0000  0.0000
0.0000          0.0.00000000           0.     0.0000       0.
0.0000      0.0000    0.    18      0

.0000E-99  .0000E-99  .0000E-99  .0000E-99  .0000E-99  .0000E-99  .2000E+03
.2000E+03  .2000E+03  .2000E+03  .0000E-99  .0000E-99  .2000E+03  .2000E+03
.0000E-99  .0000E-99  .0000E-99  .0000E-99
```

OUTPUT:

```
0 9999999999999                     0    0.0000         0.
0.0000      0  0.0000          0.     0.0000  0.0000  0.0000
0.0000          0.0.00000000           0.     0.0000       0.
0.0000      0.0000  0.     18      0

.0000E-99  .0000E-99  .0000E-99  .0000E-99 -.1714E+02  .5142E+02  .1485E+03
.2171E+03  .2171E+03  .1485E+03  .3428E+02  .3428E+02  .1657E+03  .1657E+03
.5142E+02 -.1714E+02 -.2857E+02  .1714E+02
```

```
C             PSI012
C       SMOOTHING BY FOURTH DIFFERENCES
      DIMENSION AMP(500),SAMP(500),DIFF(50 )
   21 READ 2, JA,JB,JC,JD,AE,AF,JG,AH,AI
    2 FORMAT (4I5,F9.0,F8. ,I4,F10.4,F10.0)
      READ 3, AK,JL,AM,AN,AO,AR,AS
    3 FORMAT (F10.4,I5,F1 .4,F10.0,F1 .4,F8.4,F1 .4)
      READ 4, BA,BC,BD,BE,BF,BG
    4 FORMAT (F10.4,F10.0,F10.8,F10. ,F10.4,F10. )
      READ 5, BH,BI,BJ,JF,JE
    5 FORMAT (2F10.4,F6.0,2I5)
      INBA = JF
      READ6,(AMP(N),N=1,INBA)
    6 FORMAT(7E10.4)
      PUNCH 50
   50 FORMAT(34H  I    AMP(I)     SAMP(I)     DIFF(I))
      B = 3.0/35.0
      M = INBA
      MM = M - 1
      IN = INBA - 2
      DIFF3A=AMP(4)-3.0*AMP(3)+3.0*AMP(2)-AMP(1)
      DIFF4A=AMP(5)-4.*(AMP(4)+AMP(2))+6.0*AMP(3)+AMP(1)
      SAMP(1) = 0.0
      SAMP(2) = AMP(2)-0.4*DIFF3A-1.0/7.0*DIFF4A
      DIFF3B = AMP(M) - 3.*AMP(M-1) + 3.*AMP(M-2) - AMP(M-3)
      DIFF4B=AMP(M)-4.*(AMP(M-1)+AMP(M-3))+6.*AMP(M-2)+AMP(M-4)
      SAMP(MM ) = AMP(MM ) + .4*DIFF3B-1.0/7.0*DIFF4B
      SAMP(M) = AMP(M) - 0.2*DIFF3B + B*DIFF4B
      PUNCH   7,AMP(1),SAMP(1)
    7 FORMAT(4H   1,2E10.4)
      PUNCH   8,AMP(2),SAMP(2)
    8 FORMAT(4H   2,2E10.4)
   13 DO 2  I = 3, IN
      DIFF(I)=(AMP(I-2)-4.*(AMP(I-1)+AMP(I+1))+6.*AMP(I)+AMP(I+2))
      SAMP(I)=AMP(I)-B*DIFF(I)
   20 PUNCH14,I,AMP(I),SAMP(I),DIFF(I)
   14 FORMAT(I4,3E10.4)
      PUNCH15,MM,AMP(MM),SAMP(MM)
   15 FORMAT(I4,2E10.4)
      PUNCH16,M,AMP(M),SAMP(M)
   16 FORMAT(I4,2E10.4)
      PUNCH 2, JA,JB,JC,JD,AE,AF,JG,AH,AI
      PUNCH 3, AK,JL,AM,AN,AO,AR,AS
      PUNCH 4, BA,BC,BD,BE,BF,BG
      PUNCH 5, BH,BI,BJ,JF,JE
      PUNCH6,(SAMP(N),N=1,INBA)
      GO TO 21
      END
```

COMPUTER PROGRAM DESCRIPTION

PSI013 Cosine Taper IBM 1620

By Marilyn E. Westin

PURPOSE:

To taper a data trace so that the last data reading is on the baseline. Any number of traces can be handled.

RESULT:

A trace which returns to the baseline at the righthand end.

REQUIREMENTS:

1. A core storage of at least 40,000 digits.
2. The number of readings must not exceed 1000 for each trace. (This number could be increased for an IBM 1620 with a larger memory by changing the number in the dimension statement of the Fortran deck before compiling.)

INPUT:

The form of input for the digital data must be identical with that described in the section entitled "Output" for computer program PSI002REV or PSI006REV.

METHOD:

The data readings of the last tenth of the trace are multiplied by a function which gradually brings the trace back to the baseline. The function used in this program is a cosine taper,

and the equation is

$$g(t) = (1/2)[1 - \cos(10\pi I/INBA)] \qquad (1)$$

where

I = the number of the data reading being multiplied by g(t)

and

INBA = the total number of readings, which corresponds to the length of the trace.

See figure 1 for a plot of this function from $0.9 \leq I/INBA \leq 1$. (Reference: Munk, Snodgrass and Tucker, Spectra of Low-Frequency Ocean Waves, 1959, p. 295.)

Since this procedure removes half the energy from the last tenth of the trace, the final spectral values must be adjusted by multiplying by 1.053.

ANALYSIS:

The test problem on which this code was run was a straight line consisting of 100 data points, each with a value of one(1). The results are shown in figure 1. The actual values are simply evaluated from (1). The code was then run on an actual data trace, 7250 0 1, and the plot comparing the original and tapered tail end of the trace is shown in figure 2.

It is hoped that this cosine taper will reduce the high amplitude near zero frequency. Such high amplitudes are thought to be caused, in part, by the step function created when digitization did not stop with a value at or near the baseline. Anomalous high frequency values may also be reduced by this correction.

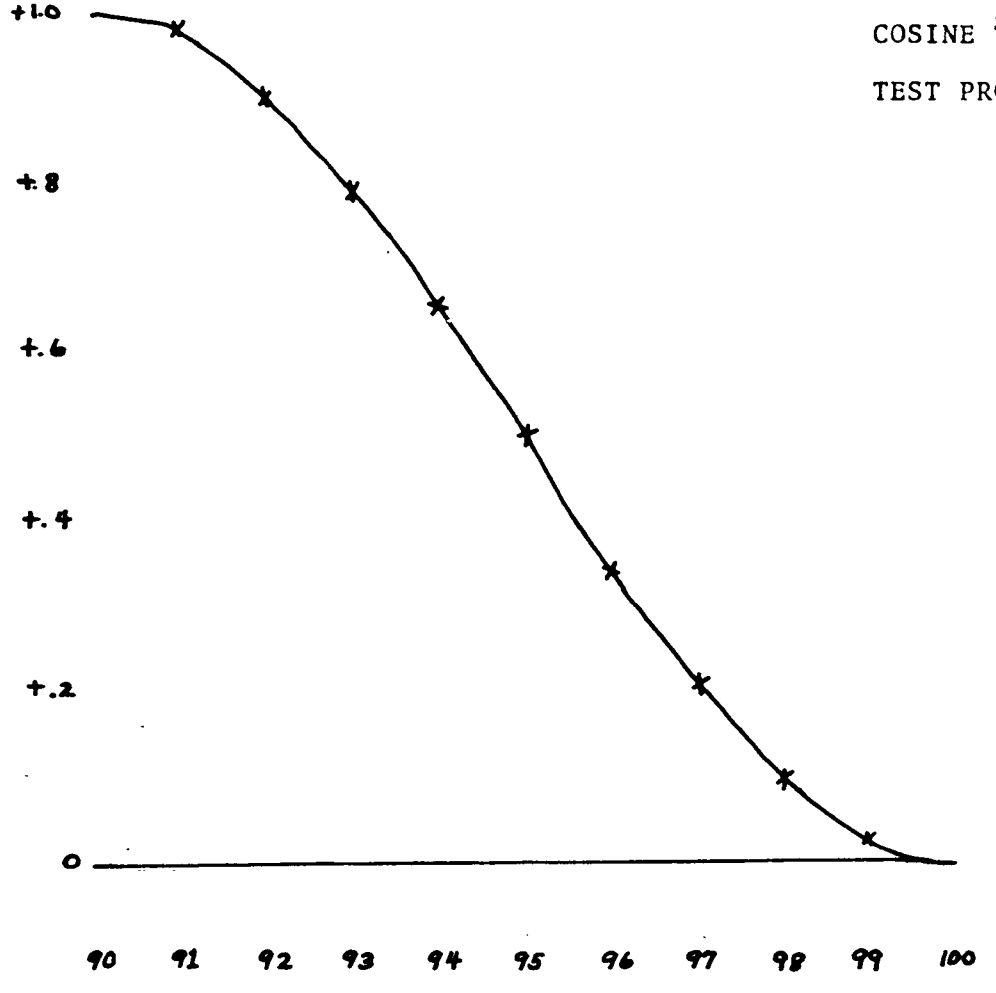

COSINE TAPER

TEST PROBLEM

FIGURE I

7250 0 1

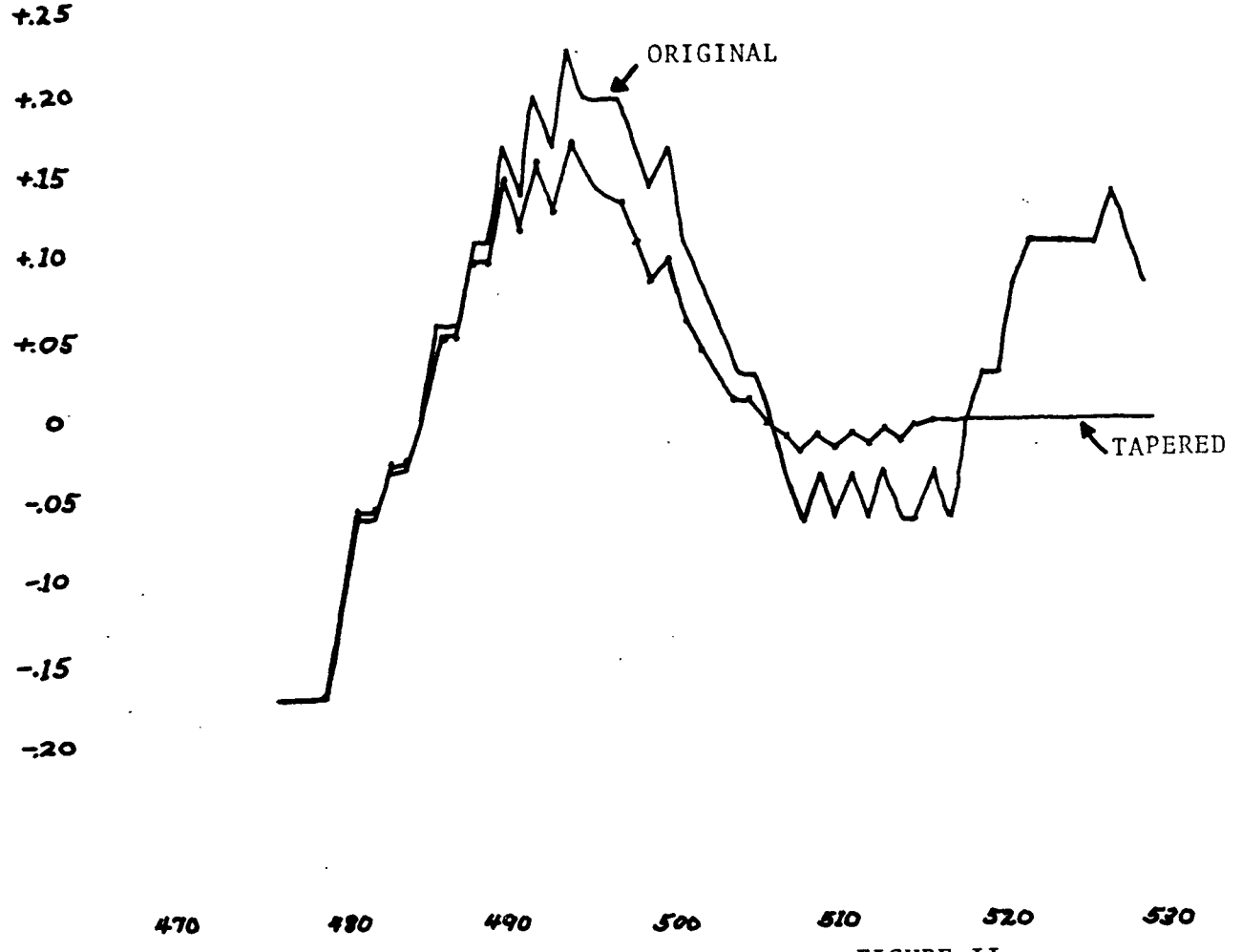

FIGURE II

OPERATING INSTRUCTIONS:

The operating instructions are identical with those described in PSI011.

OUTPUT:

The form of output is identical with that of the input.

A listing of the Fortran deck is presented on the following pages.

```
*0810
C             PSI013
C             COSINE TAPER
      DIMENSION DATA (100 )
   21 READ 2, JA,JB,JC,JD,AE,AF,JG,AH,AI,IONE
    2 FORMAT (4I5, F9.0,F8.0,I4,F10.4,F10. ,17X,I2)
      IF (IONE   1) 6, 7, 6
    7 READ 3, AK,JL,AM,AN,AO,AR,AS,ITWO
    3 FORMAT (F10.4,I5,F1 .4,F10.0,F1 .4,F8.4,F1 .4,15X,I2)
      IF (ITWO  2) 8, 9, 8
    9 READ 4, BA,BC,BD,BE,BF,BG,ITHREE
    4 FORMAT (F10.4,F10.0,F10.8,F10. ,F10.4,F10. ,18X,I2)
      IF (ITHREE - 3) 10, 11, 10
   11 READ 5, BH,BI,BJ,JF,JE,IFOUR
    5 FORMAT (2F10.4,F6.0,2I5,42X,I2)
      IF (IFOUR   4) 12, 13, 12
    6 PRINT 14
   14 FORMAT (25H CARD ONE OUT OF SEQUENCE)
      PAUSE
      GO TO 21
    8 PRINT 15
   15 FORMAT (25H CARD TWO OUT OF SEQUENCE)
      PAUSE
      GO TO 21
   10 PRINT 16
   16 FORMAT (27H CARD THREE OUT OF SEQUENCE)
      PAUSE
      GO TO 21
   12 PRINT 17
   17 FORMAT (26H CARD FOUR OUT OF SEQUENCE)
      PAUSE
      GO TO 21
   13 INBA = JF
      ICTR = 4
      DO 18 I = 1, INBA, 7
      ICTR = ICTR   1
      READ 19,A1,A2,A3,A4,A5,A6,A7,ICT
   19 FORMAT (7E10.4,7X,I3)
      IF (ICTR   ICT) 20, 22, 20
   20 PRINT 23, ICTR
   23 FORMAT (5H CARD,I4,16H OUT OF SEQUENCE)
      PAUSE
      GO TO 21
   22 DATA(I) = A1
      DATA(I+1) = A2
      DATA(I+2) = A3
      DATA(I+3) = A4
      DATA(I+4) = A5
      DATA(I+5) = A6
   18 DATA(I+6) = A7
      IN=INBA - (INBA/10)
      DO 2    I=IN,INBA
      A=I
      AINBA = INBA
  200 DATA(I) = DATA(I)*(.5*(1.-COSF(31.415927*A/AINBA)))
      NAME = 0
      PUNCH 102, JA,JB,JC,JD,AE,AF,JG,AH,AI,NAME,IONE
  102 FORMAT (4I5,F9.0,F8. ,I4,F10.4,F10.0,9X,I7,I3)
      PUNCH 103, AK,JL,AM,AN,AO,AR,AS,NAME,ITWO
  103 FORMAT (F10.4,I5,F1 .4,F10.0,F1 .4,F8.4,F1 .4,7X,I7,I3)
```

```
      PUNCH 104, BA,BC,BD,BE,BF,BG,NAME,ITHREE
  104 FORMAT (F10.4,F10.0,F10.8,F10. ,F10.4,F10. ,10X,I7,I3)
      PUNCH 105, BH,BI,BJ,JF,JE,NAME,IFOUR
  105 FORMAT (2F10.4,F6.0,2I5,34X,I7,I3)
      NAME = NAME*1       4
      DO 1 6 I = 1, INBA, 7
      NAME = NAME    1
      A1 = DATA(I)
      A2 = DATA(I+1)
      A3 = DATA(I+2)
      A4 = DATA(I+3)
      A5 = DATA(I+4)
      A6 = DATA(I+5)
      A7 = DATA(I+6)
  106 PUNCH 107, A1,A2,A3,A4,A5,A6,A7,NAME
  107 FORMAT (7E10.4,I10)
      GO TO 21
      END
```

```
*0810
C       CHECK SEQUENCE OF INPUT CARDS
        DIMENSION DATA (1000)
   21 READ 2, JA,JB,JC,JD,AE,AF,JG,AH,AI,IONE
    2 FORMAT (4I5, F9.0,F8.0,I4,F10.4,F10.0,17X,I2)
        IF (IONE - 1) 6, 7, 6
    7 READ 3, AK,JL,AM,AN,AO,AR,AS,ITWO
    3 FORMAT (F10.4,I5,F10.4,F10.0,F10.4,F8.4,F10.4,15X,I2)
        IF (ITWO -2) 8, 9, 8
    9 READ 4, BA,BC,BD,BE,BF,BG,ITHREE
    4 FORMAT (F10.4,F10.0,F10.8,F10.0,F10.4,F10.0,18X,I2)
        IF (ITHREE - 3) 10, 11, 10
   11 READ 5, BH,BI,BJ,JF,JE,IFOUR
    5 FORMAT (2F10.4,F6.0,2I5,42X,I2)
        IF (IFOUR - 4) 12, 13, 12
    6 PRINT 14
   14 FORMAT (25H CARD ONE OUT OF SEQUENCE)
        PAUSE
        GO TO 21
    8 PRINT 15
   15 FORMAT (25H CARD TWO OUT OF SEQUENCE)
        PAUSE
        GO TO 21
   10 PRINT 16
   16 FORMAT (27H CARD THREE OUT OF SEQUENCE)
        PAUSE
        GO TO 21
   12 PRINT 17
   17 FORMAT (26H CARD FOUR OUT OF SEQUENCE)
        PAUSE
        GO TO 21
   13 INBA = JF
        ICTR = 4
        DO 18 I = 1, INBA, 7
        ICTR = ICTR + 1
        READ 19,A1,A2,A3,A4,A5,A6,A7,ICT
   19 FORMAT (7E10.4,7X,I3)
        IF (ICTR - ICT) 20, 22, 20
   20 PRINT 23, ICTR
   23 FORMAT (5H CARD,I4,16H OUT OF SEQUENCE)
        PAUSE
        GO TO 21
   22 DATA(I) = A1
        DATA(I+1) = A2
        DATA(I+2) = A3
        DATA(I+3) = A4
        DATA(I+4) = A5
        DATA(I+5) = A6
    18 DATA(I+6) = A7
C       ***** IDENTIFY OUTPUT CARDS *****
        NAME = 100*JA+JB/1000*10+JC/1000
        PUNCH 102, JA,JB,JC,JD,AE,AF,JG,AH,AI,NAME,IONE
  102 FORMAT (4I5,F9.0,F8.0,I4,F10.4,F10.0,9X,I7,I3)
        PUNCH 103, AK,JL,AM,AN,AO,AR,AS,NAME,ITWO
  103 FORMAT (F10.4,I5,F10.4,F10.0,F10.4,F8.4,F10.4,7X,I7,I3)
        PUNCH 104, BA,BC,BD,BE,BF,BG,NAME,ITHREE
  104 FORMAT (F10.4,F10.0,F10.8,F10.0,F10.4,F10.0,10X,I7,I3)
        PUNCH 105, BH,BI,BJ,JF,JE,NAME,IFOUR
  105 FORMAT (2F10.4,F6.0,2I5,34X,I7,I3)
        NAME = NAME*1000 + 4
```

```
      DO 106 I = 1, INBA, 7
      NAME = NAME + 1
      A1 = DATA(I)
      A2 = DATA(I+1)
      A3 = DATA(I+2)
      A4 = DATA(I+3)
      A5 = DATA(I+4)
      A6 = DATA(I+5)
      A7 = DATA(I+6)
  106 PUNCH 107, A1,A2,A3,A4,A5,A6,A7,NAME
  107 FORMAT (7E10.4,I10)
      GO TO 21
      END
```

COMPUTER PROGRAM DESCRIPTION

PSI014 Drift Removal IBM 1620

By John W. Hawes

PURPOSE:

To remove the drift observed after integration of a seismic trace.

RESULT:

A seismic trace fluctuating about the time axis.

REQUIREMENTS:

1. A core storage of at least 40,000 digits.
2. The number of readings must not exceed 1500 for each trace. (This number could be increased for an IBM 1620 with a larger memory by changing the number in the dimension statement of the source program and recompiling.)
3. The form of input for the digital data is described in detail in the section on input.

INPUT:

The form of input for digital data must be identical with that described in the section entitled "OUTPUT" for the computer program PSI002REV (Semi-Annual Report to U.S. Coast and Geodetic Survey by Planetary Sciences Incorporated, Dec. 31, 1962, page 39). Note: the four format cards and the data must be sequentially numbered.

METHOD:

A quadratic is "fitted" to the trace with drift. To find the equation of the curve about which the trace presumably oscillates, every twenty-fifth point is selected. From observation, nine readings approximately constitute a cycle on the trace; hence averages are taken of nine readings about every twenty-fifth point. Using the method of least-square polynomials, a best fit for the equation of these calculated values is found.

$$a_0 + a_1(\Sigma x) + a_2(\Sigma x^2) = (\Sigma y)$$

$$a_0 x + a_1(\Sigma x^2) + a_2(\Sigma x^3) = (\Sigma xy)$$

where

x = equal increments along the x axis

y = averaged data value corresponding to x

a = coefficients to be found

(Reference: Lanczos,C., Applied Analysis, 1956, pp.344-346)

In contrast to the usual curve-fitting procedure, here the first term of the quadratic is set equal to zero. The first value of all traces is taken as zero.

$$A\ (\Sigma x) + B\ (\Sigma x^2) = \Sigma y$$

$$A\ (\Sigma x^2) + B\ (\Sigma x^3) = \Sigma xy$$

where

A & B = symbols used for coefficients in code

OPERATING INSTRUCTIONS:

The operating procedures are identical to those described in computer program description PSI011.

OUTPUT:

The format of the output is identical with that of the input so that the data may be processed by other PSI codes. This code, PSI014, checks for sequence. Should any of the format cards or data cards be out of order the message "card XX out of sequence" will be typed on the console typewriter, "XX" being the number of the card.

If a card is out of sequence,

1. Arrange the cards in proper order.
2. Replace the format cards and data cards in reader hopper.
3. Depress Reader Start and Start keys.

Output from PSI014 is plotted with the integrated trace input in figure (1). A flow chart and printout of PSI014 are included on the following pages.

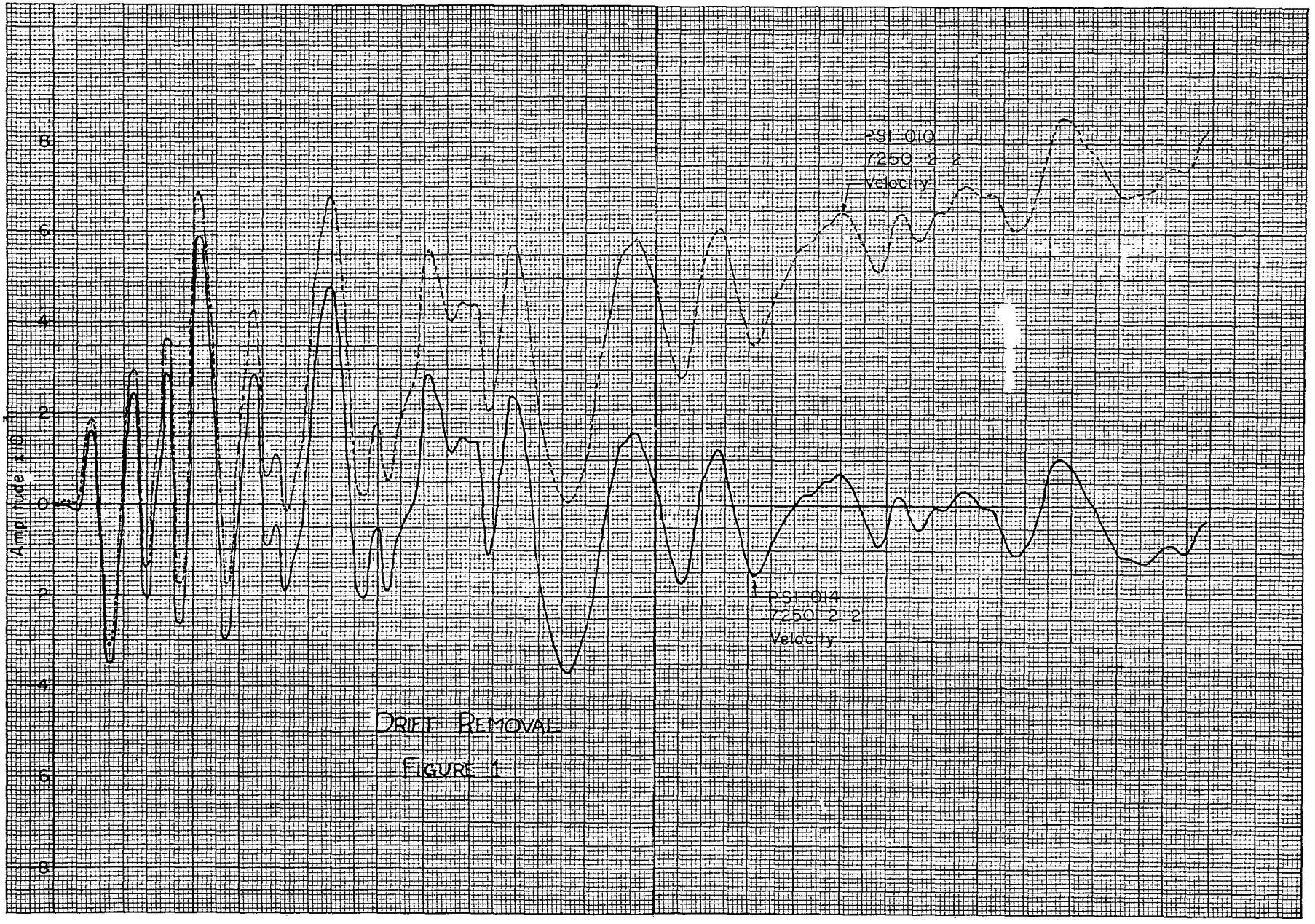

DRIFT REMOVAL

FIGURE 1

```
INPUT          VELOCITY COMPUTED FROM PSI010

 7250 2111 2222 1111       0.      0.  60   60.8000 43542147.                01
  114.2000  356      .1466 62454362.   11.0000  -.0240 6245.4362             02
   70.0000 62454362. .02857142 62454362.      .8856 62454362.                03
  999.0000 2126.0500 4354.  250    0                                         04
 .0000E-99 .5707E-05 .3960E-04 .6779E-04 .1877E-04 .1902E-04 .5785E-03        05
 .1517E-02 .1885E-02 .1198E-02-.2524E-03-.2055E-02-.3098E-02-.2434E-02        06
-.6311E-03 .1302E-02 .2444E-02 .2970E-02 .2181E-02-.3699E-03-.1414E-02        07
 .2226E-03 .9847E-03 .1788E-02 .3667E-02 .3533E-02 .9243E-03-.1725E-02        08
-.1524E-02 .2049E-02 .5406E-02 .6885E-02 .6501E-02 .5285E-02 .4079E-02        09
 .2369E-02-.1786E-03-.1762E-02-.1278E-02 .3179E-03 .1512E-02 .2536E-02        10
 .3690E-02 .4266E-02 .3422E-02 .1616E-02 .6023E-03 .8121E-03 .1103E-02        11
 .5156E-03-.1850E-03 .6266E-04 .6184E-03 .1037E-02 .1855E-02 .3247E-02        12
 .4795E-02 .5679E-02 .6236E-02 .6733E-02 .6782E-02 .6231E-02 .5222E-02        13
 .3747E-02 .2083E-02 .8416E-03 .2193E-03 .2058E-03 .8302E-03 .1690E-02        14
 .1762E-02 .1001E-02 .5007E-03 .8086E-03 .1556E-02 .1991E-02 .2294E-02        15
 .2480E-02 .2842E-02 .4004E-02 .5288E-02 .5571E-02 .5301E-02 .4981E-02        16
 .4566E-02 .4187E-02 .4008E-02 .4213E-02 .4440E-02 .4413E-02 .4372E-02        17
 .4437E-02 .3949E-02 .2804E-02 .2051E-02 .2395E-02 .3403E-02 .4385E-02        18
 .5279E-02 .5709E-02 .5621E-02 .5241E-02 .4690E-02 .3850E-02 .2807E-02        19
 .1965E-02 .1502E-02 .1076E-02 .6780E-03 .3531E-03 .1673E-03 .6562E-04        20
 .1023E-03 .3229E-03 .6883E-03 .1064E-02 .1571E-02 .2310E-02 .3039E-02        21
 .3624E-02 .4104E-02 .4658E-02 .5259E-02 .5512E-02 .5606E-02 .5776E-02        22
 .5852E-02 .5698E-02 .5444E-02 .5228E-02 .4889E-02 .4315E-02 .3797E-02        23
 .3456E-02 .3112E-02 .2829E-02 .2866E-02 .3221E-02 .3859E-02 .4652E-02        24
 .5270E-02 .5615E-02 .5851E-02 .6065E-02 .6088E-02 .5778E-02 .5296E-02        25
 .4852E-02 .4479E-02 .4080E-02 .3697E-02 .3538E-02 .3600E-02 .3772E-02        26
 .4040E-02 .4394E-02 .4661E-02 .4844E-02 .5032E-02 .5233E-02 .5455E-02        27
 .5614E-02 .5709E-02 .5742E-02 .5828E-02 .6006E-02 .6160E-02 .6184E-02        28
 .6263E-02 .6405E-02 .6470E-02 .6414E-02 .6292E-02 .6113E-02 .5901E-02        29
 .5703E-02 .5485E-02 .5277E-02 .5141E-02 .5254E-02 .5669E-02 .6114E-02        30
 .6375E-02 .6436E-02 .6323E-02 .6099E-02 .5893E-02 .5837E-02 .5950E-02        31
 .6190E-02 .6418E-02 .6498E-02 .6473E-02 .6531E-02 .6714E-02 .6895E-02        32
 .6993E-02 .7047E-02 .6997E-02 .6908E-02 .6825E-02 .6812E-02 .6868E-02        33
 .6859E-02 .6727E-02 .6474E-02 .6223E-02 .6082E-02 .6060E-02 .6137E-02        34
 .6293E-02 .6501E-02 .6807E-02 .7196E-02 .7619E-02 .8015E-02 .8341E-02        35
 .8499E-02 .8533E-02 .8499E-02 .8438E-02 .8282E-02 .8064E-02 .7914E-02        36
 .7841E-02 .7722E-02 .7529E-02 .7348E-02 .7189E-02 .7027E-02 .6876E-02        37
 .6818E-02 .6837E-02 .6874E-02 .6883E-02 .6901E-02 .6907E-02 .6959E-02        38
 .7097E-02 .7251E-02 .7374E-02 .7466E-02 .7474E-02 .7428E-02 .7392E-02        39
 .7443E-02 .7621E-02 .7906E-02 .8154E-02 .8305E-02                            40
```

OUTPUT VELOCITY WITHOUT TREND FROM PSI014

```
 7250 2111 2222 1111       0.      0.  60   60.8000 43542147.                1
  114.2000  356      .1466 62454362.   11.0000  -.0240 6245.4362              2
   70.0000 62454362. .02857142 62454362.     .8856 62454362.                  3
  999.0000 2126.0500 4354.  250    0                                          4
 .0000E-99-.2708E-04-.2599E-04-.3062E-04-.1124E-03-.1450E-03 .3815E-03         5
 .1287E-02 .1622E-02 .9023E-03-.5809E-03-.2416E-02-.3492E-02-.2861E-02         6
-.1091E-02 .8086E-03 .1917E-02 .2410E-02 .1588E-02-.9954E-03-.2072E-02         7
-.4690E-03 .2599E-03 .1030E-02 .2875E-02 .2708E-02 .6698E-04-.2615E-02         8
-.2447E-02 .1092E-02 .4415E-02 .5861E-02 .5444E-02 .4195E-02 .2955E-02         9
 .1212E-02-.1368E-02-.2985E-02-.2534E-02-.9718E-03 .1889E-03 .1179E-02        10
 .2300E-02 .2842E-02 .1965E-02 .1258E-03-.9212E-03-.7449E-03-.4875E-03        11
-.1108E-02-.1842E-02-.1628E-02-.1106E-02-.7211E-03 .6328E-04 .1421E-02        12
 .2936E-02 .3786E-02 .4309E-02 .4773E-02 .4788E-02 .4203E-02 .3161E-02        13
 .1652E-02-.4522E-04-.1320E-02-.1976E-02-.2023E-02-.1433E-02-.6070E-03        14
-.5688E-03-.1363E-02-.1897E-02-.1623E-02-.9102E-03-.5090E-03-.2399E-03        15
-.8788E-04 .2401E-03 .1368E-02 .2618E-02 .2867E-02 .2563E-02 .2209E-02        16
 .1760E-02 .1347E-02 .1134E-02 .1305E-02 .1498E-02 .1437E-02 .1361E-02        17
 .1392E-02 .8707E-03-.3084E-03-.1095E-02-.7857E-03 .1880E-03 .1135E-02        18
 .1995E-02 .2391E-02 .2269E-02 .1854E-02 .1269E-02 .3953E-03-.6819E-03        19
-.1558E-02-.2055E-02-.2515E-02-.2948E-02-.3307E-02-.3527E-02-.3663E-02        20
-.3661E-02-.3475E-02-.3144E-02-.2803E-02-.2330E-02-.1626E-02-.9318E-03        21
-.3813E-03 .6411E-04 .5835E-03 .1149E-02 .1368E-02 .1427E-02 .1563E-02        22
 .1604E-02 .1415E-02 .1127E-02 .8765E-03 .5028E-03-.1058E-03-.6585E-03        23
-.1034E-02-.1413E-02-.1730E-02-.1728E-02-.1408E-02-.8051E-03-.4696E-04        24
 .5361E-03 .8463E-03 .1047E-02 .1226E-C2 .1214E-02 .8697E-03 .3528E-03        25
-.1260E-03-.5340E-03-.9679E-03-.1385E-02-.1579E-02-.1552E-02-.1416E-02        26
-.1183E-02-.8641E-03-.6321E-03-.4842E-03-.3313E-03-.1654E-03 .2138E-04        27
 .1452E-03 .2050E-03 .2029E-03 .2537E-03 .3965E-03 .5152E-03 .5040E-03        28
 .5478E-03 .6545E-03 .6842E-03 .5929E-03 .4356E-03 .2213E-03-.2599E-04        29
-.2593E-03-.5127E-03-.7560E-03-.9274E-03-.8498E-03-.4703E-03-.6075E-04        30
 .1647E-03 .1903E-03 .4183E-04-.2176E-03-.4591E-03-.5507E-03-.4732E-03        31
-.2688E-03-.7637E-04-.3196E-04-.9256E-04-.7018E-04 .7718E-04 .2225E-03        32
 .2848E-03 .3032E-03 .2175E-03 .9281E-04-.2590E-04-.7464E-04-.5439E-04        33
-.9915E-04-.2669E-03-.5557E-03-.8425E-03-.1019E-02-.1077E-02-.1036E-02        34
-.9159E-03-.7437E-03-.4736E-03-.1205E-03 .2664E-03 .6265E-03 .9165E-03        35
 .1038E-02 .1036E-02 .9666E-03 .8696E-03 .6775E-03 .4235E-03 .2374E-03        36
 .1284E-03-.2667E-04-.2557E-03-.4728E-03-.6680E-03-.8661E-03-.1053E-02        37
-.1147E-02-.1164E-02-.1163E-02-.1191E-02-.1209E-02-.1239E-02-.1223E-02        38
-.1122E-02-.1004E-02-.9177E-03-.8620E-03-.8904E-03-.9727E-03-.1045E-02        39
-.1030E-02-.8889E-03-.6403E-03-.4287E-03-.3141E-03 .0000E-99 .0000E-99        40
```

PSI 014

Drift Removal - Fortran II

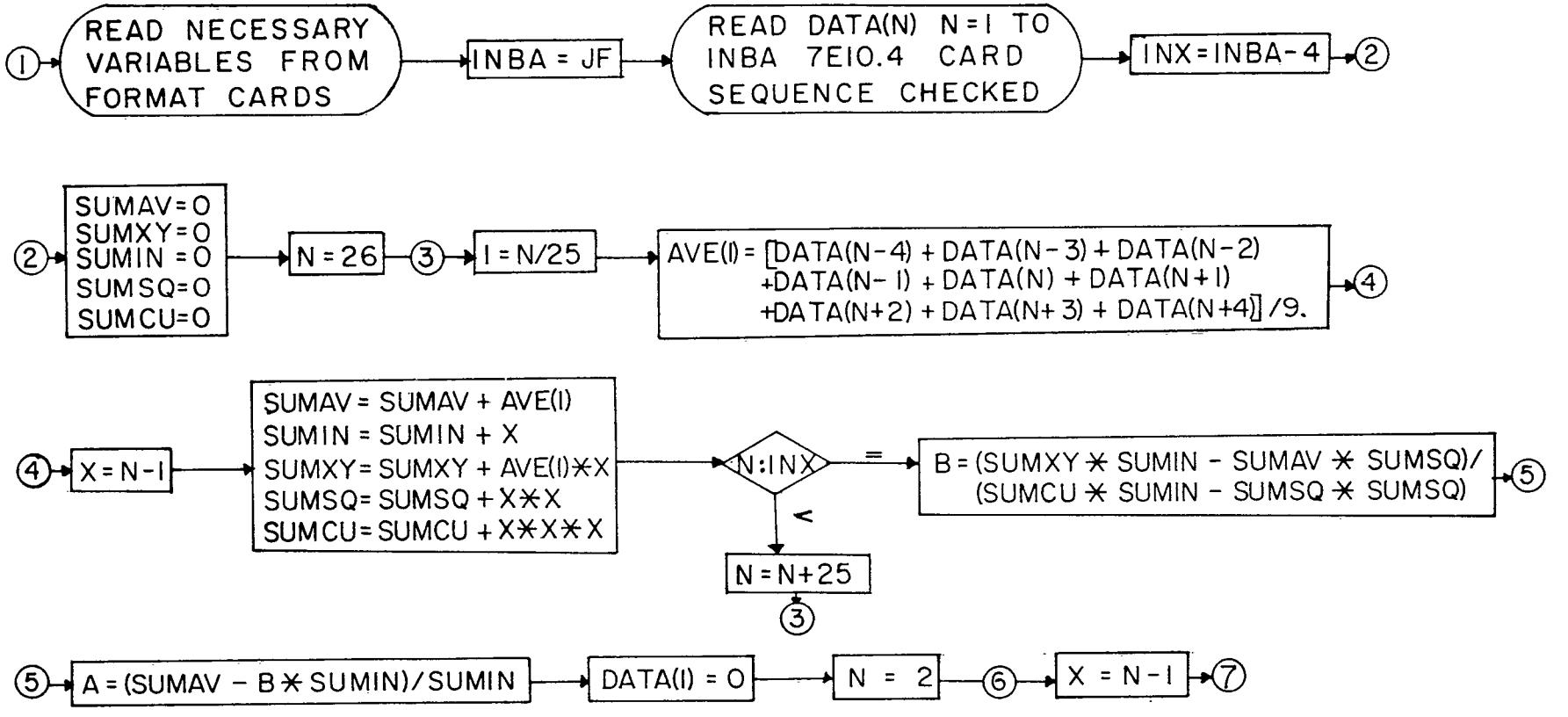

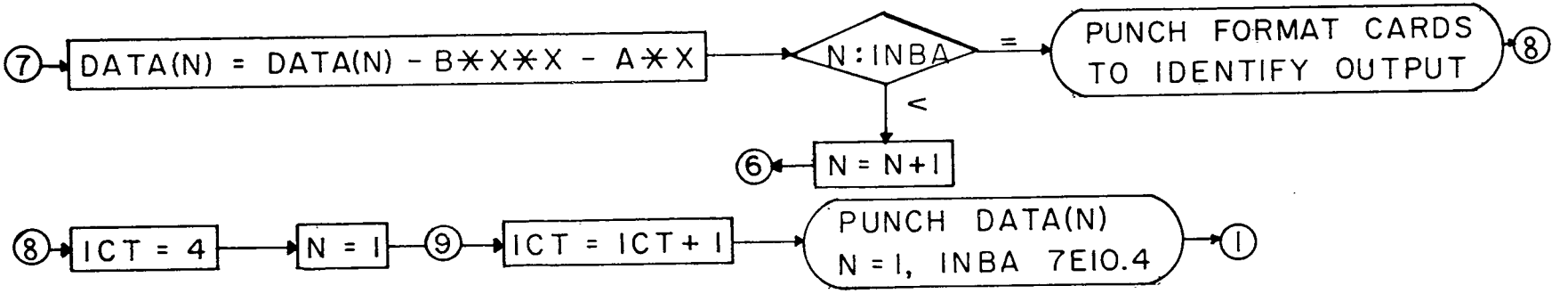
7
DATA(N) = DATA(N) - B**X**X - A**X
N:INBA
=
PUNCH FORMAT CARDS TO IDENTIFY OUTPUT
8
<
6
N = N+1
8
ICT = 4
N = 1
9
ICT = ICT+1
PUNCH DATA(N) N = 1, INBA 7E10.4
1

```
*0810
C                    PSI014
C          DRIFT REMOVAL - QUADRATIC
       DIMENSION DATA(1500),AVE(60)
   21  READ 2, JA,JB,JC,JD,AE,AF,JG,AH,AI,IONE
    2  FORMAT (4I5, F9.0,F8.0,I4,F10.4,F10.0,17X,I2)
       IF (IONE - 1) 6, 7, 6
    7  READ 3, AK,JL,AM,AN,AO,AR,AS,ITWO
    3  FORMAT (F10.4,I5,F10.4,F10.0,F10.4,F8.4,F10.4,15X,I2)
       IF (ITWO -2) 8, 9, 8
    9  READ 4, BA,BC,BD,BE,BF,BG,ITHREE
    4  FORMAT (F10.4,F10.0,F10.8,F10.0,F10.4,F10.0,18X,I2)
       IF (ITHREE - 3) 10, 11, 10
   11  READ 5, BH,BI,BJ,JF,JE,IFOUR
    5  FORMAT (2F10.4,F6.0,2I5,42X,I2)
       IF (IFOUR - 4) 12, 13, 12
    6  PRINT 14
   14  FORMAT (25H CARD ONE OUT OF SEQUENCE)
       PAUSE
       GO TO 21
    8  PRINT 15
   15  FORMAT (25H CARD TWO OUT OF SEQUENCE)
       PAUSE
       GO TO 21
   10  PRINT 16
   16  FORMAT (27H CARD THREE OUT OF SEQUENCE)
       PAUSE
       GO TO 21
   12  PRINT 17
   17  FORMAT (26H CARD FOUR OUT OF SEQUENCE)
       PAUSE
       GO TO 21
   13  INBA = JF
       ICTR = 4
       DO 18 I = 1, INBA, 7
       ICTR = ICTR + 1
       READ 19,A1,A2,A3,A4,A5,A6,A7,ICT
   19  FORMAT (7E10.4,7X,I3)
       IF (ICTR - ICT) 20, 22, 20
   20  PRINT 23, ICTR
   23  FORMAT (5H CARD,I4,16H OUT OF SEQUENCE)
       PAUSE
       GO TO 21
   22  DATA(I) = A1
       DATA(I+1) = A2
       DATA(I+2) = A3
       DATA(I+3) = A4
       DATA(I+4) = A5
       DATA(I+5) = A6
   18  DATA(I+6) = A7
       INX = INBA-4
       SUMAV = 0.0
       SUMXY = 0.0
       SUMIN = 0.0
       SUMSQ = 0.0
       SUMCU = 0.0
       DO 31 N=26,INX,25
       I = N/25
       AVE(I) = (DATA(N-4)+DATA(N-3)+DATA(N-2)+DATA(N-1)+DATA(N)
      /          +DATA(N+1)+DATA(N+2)+DATA(N+3)+DATA(N+4))/9.
```

```
      X = N-1
      SUMAV = SUMAV+AVE(I)
      SUMIN = SUMIN+X
      SUMXY = SUMXY+AVE(I)*X
      SUMSQ = SUMSQ+X*X
   31 SUMCU = SUMCU+X*X*X
      B = (SUMXY*SUMIN-SUMAV*SUMSQ)/(SUMCU*SUMIN-SUMSQ*SUMSQ)
      A = (SUMAV-B*SUMSQ)/SUMIN
      DATA(1) = 0.0
      DO 33 N=2,INBA
      X = N-1
   33 DATA(N) = DATA(N)-B*X*X-A*X
      PUNCH 2, JA,JB,JC,JD,AE,AF,JG,AH,AI,IONE
      PUNCH 3, AK,JL,AM,AN,AO,AR,AS,ITWO
      PUNCH 4, BA,BC,BD,BE,BF,BG,ITHREE
      PUNCH 5, BH,BI,BJ,JF,JE,IFOUR
      ICT = 4
      DO 35 N=1,INBA,7
      ICT = ICT+1
      A1 = DATA(N)
      A2 = DATA(N+1)
      A3 = DATA(N+2)
      A4 = DATA(N+3)
      A5 = DATA(N+4)
      A6 = DATA(N+5)
      A7 = DATA(N+6)
   35 PUNCH 37, A1,A2,A3,A4,A5,A6,A7,ICT
   37 FORMAT (7E10.4,7X,I3)
      GO TO 21
      END
```

COMPUTER-PLOTTER PROGRAM DESCRIPTION

PSI015 Particle Motion Plots IBM 7090-7094 Calcomp Plotter

By Nancy L. Nuhn

PURPOSE:

To prepare a magnetic tape for controlling the Calcomp plotter for point-to-point particle motion plots of seismic data traces.

RESULT:

A particle motion plot of two seismic data traces with one a function of the other. Any number of pairs of traces may be handled.

REQUIREMENTS:

1. The number of readings must not exceed 2500 for each trace. This number may be increased by changing the number in the dimension statement of the source deck and recompiling.
2. The program is written to operate a California Computer Product's Digital Incremental Recorder (Model 565)--off-line--with a magnetic tape generated on the IBM 7090 or 7094. Tape specifications are those of the IBM Service Bureau Corporation, San Jose, California.
3. Subroutines called were provided by California Computer Products and require a B5 output tape with a density of Low 200. The plotter is not able

to operate with tapes of higher densities.

INPUT:

The form of input for the digital data must be identical with that described in the "output" section for computer program PSI 002REV (Semi-Annual Report to U.S. Coast and Geodetic Survey, by Planetary Sciences Incorporated, 31, Dec. 1962). The data are referred to by the variable names X (that to be plotted on the X axis) and Y (that to be plotted on the Y axis) and is read in floating point with a format of E10.4. All statements are read in on INPUT TAPE 5.

The program requires that a blank card be placed at the end of the data deck for normal exit from the computer.

METHOD:

The first three fields of the lead format cards are used by the plotter subroutine AXIS to identify the X and Y axes. This information is read in A format to satisfy the AXIS routine's BCD specification.

Traces of unequal number of data values (due to deletion of leading zeros) are made equal by replacing leading zeros to the smaller of the two traces being plotted.

The data are scaled to an X and Y axis of 10.0 inches each by the SCALE routines. The AXIS routines annotate and identify each axis using values computed in the SCALE routines. The LINE routine draws a continous line through

the co-ordinates in the arrays X and Y plotting 70 data values per plot. Routines THREE and PLOT position the plotter pen to draw the axes for the next 70 data values. There is a 3 inch margin between plots. The plotter will continue in this manner until all data values have been plotted.

For further description of the plotter subroutines refer to CalComp Bulletin No. 120A, October, 1962.

OPERATING INSTRUCTIONS:

Compile the Fortran II Source deck and the following CalComp subroutines on the IBM 7090 or 7094: AXIS, BCDFL, DXDY, LINE, MSG, NUMBER, PLOT, PLOTS, SCALE, SYMBL4, THREE, TRW2 and TRWS. Specific identification cards for source deck and data are provided by the operator. A B5 magnetic tape (density low 200) is generated.

The tape is placed on an off-line system to control a CalComp Digital Incremental Recorder.

OUTPUT:

1. A B5 tape generated on the IBM 7090 or 7094 to control the plotter.
2. Particle motion plots with identified and annotated X and Y axes of 10.0 inches each.

Zeros in the third field of the lead format cards (used for axes identification) are not drawn automatically by the plotter.

Plotter Model 565 has a step size of .01 inches and a speed of 18,000 steps per minute on the X and Y axes.

A listing of the Fortran deck, Flowchart and test problem are presented on the following pages.

```
      DIMENSION X(2500),Y(2500),DATA(2002),DENX(3),DENY(3),BX(3),BY(3)

      DIMENSION X(2500),Y(2500),DATA(2002),DENX(3),DENY(3),BX(3),BY(3)
   27 J=1
      READ INPUT TAPE 5,3,(DENX(K),K=1,3)
    3 FORMAT (XA4,2A5)
      IF (DENX(1))28,28,5
    5 DO 10 L=2,3
   10 READ INPUT TAPE 5,11
   11 FORMAT  (80X)
      GO TO (30,60),J
   30 READ INPUT TAPE 5,40,INBAX
   40 FORMAT (26X,I5)
      READ INPUT TAPE 5,50,(X(N),N=1,INBAX)
   50 FORMAT (7E10.4)
      J=2
      READ INPUT TAPE 5,4,(DENY(K),K=1,3)
    4 FORMAT (3A5)
      GO TO 5
   60 READ INPUT TAPE 5,40,INBAY
      READ INPUT TAPE 5,50,(Y(N),N=1,INBAY)
      IF (INBAX-INBAY) 7,55,9
   55 INBA=INBAX
      GO TO 8
    7 N=INBAY-INBAX
      I=INBAY
      J=INBAX
   16 X(I)=X(J)
      IF(J-1) 20,20,19
   19 I=I-1
      J=J-1
       GO TO 16
   20 DO 26 I=1,N
   26 X(I)=0.
      INBA = INBAY
      GO TO 8
    9 N=INBAX-INBAY
      I=INBAX
      J=INBAY
   17 Y(I)=Y(J)
      IF(J-1) 21,21,18
   18 I=I-1
      J=J-1
      GO TO 17
   21 DO 25 I=1,N
   25 Y(I)=0.
      INBA=INBAX
    8 CONTINUE
      CALL PLOTS (DATA(1000),998,10.0)
      CALL TRWS (DATA (2002))
      CALL SCALE (X,INBA,10.0,XMIN,DX)
      CALL SCALE (Y,INBA,10.0,YMIN,DY)
      BY(3)=DENY(1)
      BY(2)=DENY(2)
      BY(1)=DENY(3)
      BX(3)=DENX(1)
      BX(2)=DENX(2)
      BX(1)=DENX(3)
```

```
      DIMENSION X(2500),Y(2500),DATA(2002),DENX(3),DENY(3),BX(3),BY(3)

      JNBA=INBA
      DO 70 I=1,INBA,70
      CALL AXIS(0.,0.,BX(3),15,10.0,0.0,XMIN,DX)
      CALL AXIS(0.,0.,BY(3),15,10.0,90.0,YMIN,DY)
      K=XMINOF (JNBA,70)
      CALL LINE (X(I),Y(I),K)
      JNBA=JNBA-70
      CALL THREE (0.,0.,13.)
      CALL PLOT (13.,0.,3,+1)
   70 CONTINUE
      GO TO 27
   28 END FILE 10
      REWIND 10
      CALL EXIT
      END(1,1,0,0,0,0,0,1,0,0,0,0,0,0,0)
```

PSI 015

P.M.P. — FORTRAN II

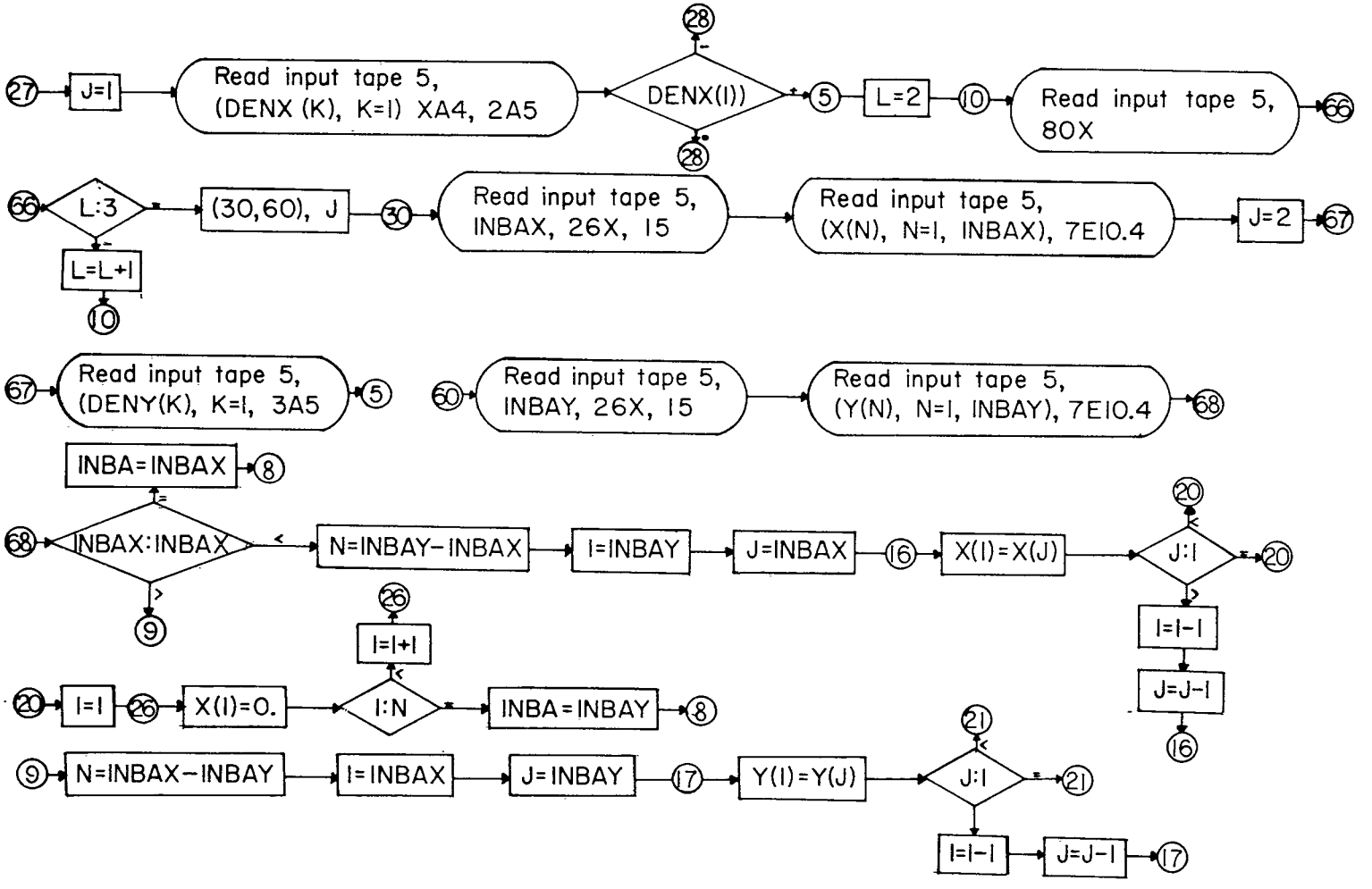

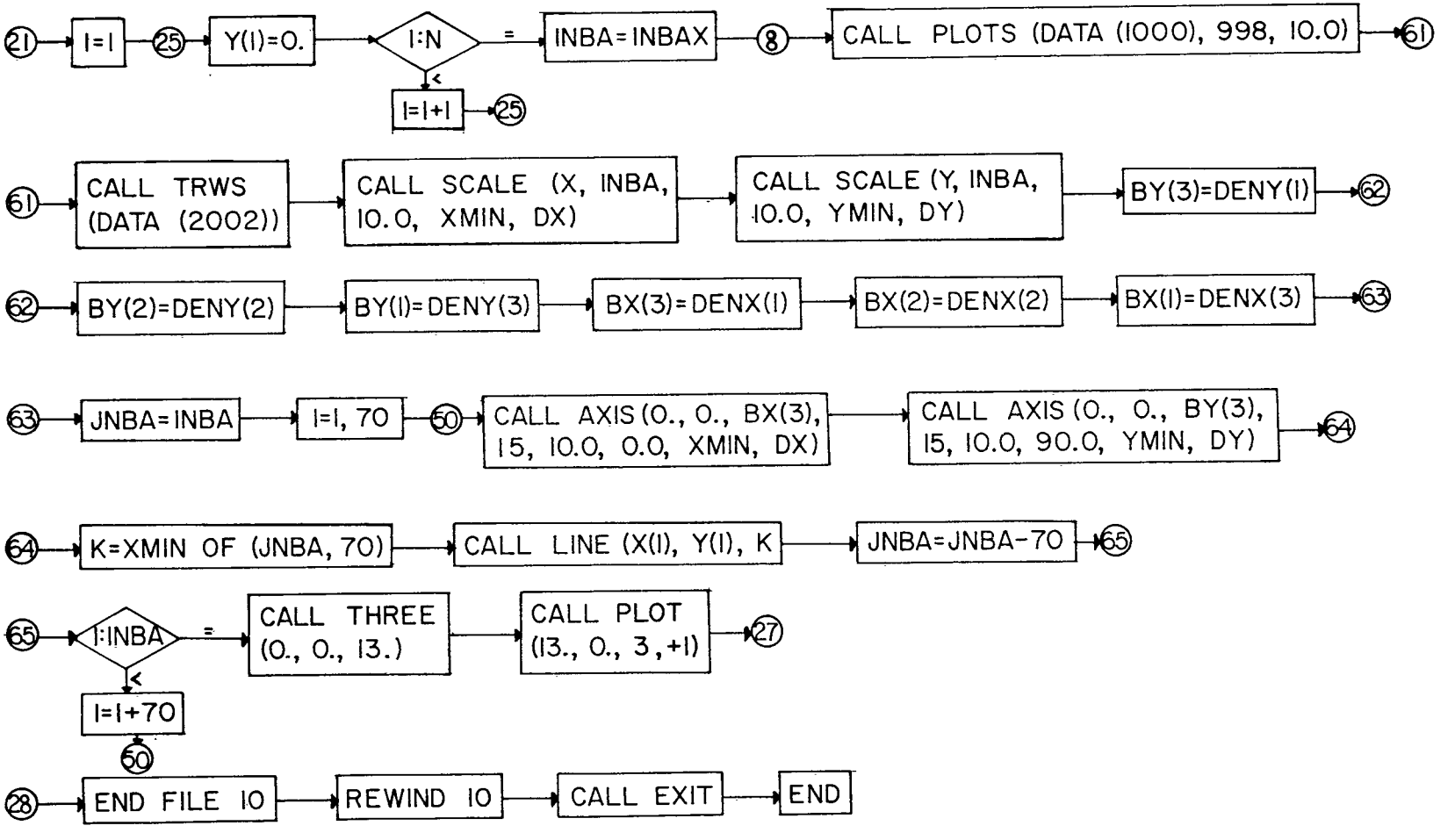
21
I=1
25
Y(I)=0.
I:N
=
INBA=INBAX
8
CALL PLOTS (DATA (1000), 998, 10.0)
61
<
I=I+1
25
61
CALL TRWS (DATA (2002))
CALL SCALE (X, INBA, 10.0, XMIN, DX)
CALL SCALE (Y, INBA, 10.0, YMIN, DY)
BY(3)=DENY(1)
62
62
BY(2)=DENY(2)
BY(1)=DENY(3)
BX(3)=DENX(1)
BX(2)=DENX(2)
BX(1)=DENX(3)
63
63
JNBA=INBA
I=1, 70
50
CALL AXIS (0., 0., BX(3), 15, 10.0, 0.0, XMIN, DX)
CALL AXIS (0., 0., BY(3), 15, 10.0, 90.0, YMIN, DY)
64
64
K=XMIN OF (JNBA, 70)
CALL LINE (X(I), Y(I), K
JNBA=JNBA-70
65
65
I:INBA
=
CALL THREE (0., 0., 13.)
CALL PLOT (13., 0., 3, +1)
27
<
I=I+70
50
28
END FILE 10
REWIND 10
CALL EXIT
END

5678 0000 00
-20.000
-16.000
-12.000
-8.000
-4.000
-.000
4.000
8.000
12.000
16.000
20.000
1234 0000 11

FIGURE 1

TEST PROBLEM

	X	Y
1.	0.	0.
2.	5.	0.
3.	5.	5.
4.	0.	5.
5.	-5.	5.
6.	-5.	0.
7.	-5.	-5.
8.	0.	-5.
9.	5.	-5.
10.	10.	-5.
11.	10.	0.
12.	10.	5.
13.	10.	10.
14.	5.	10.
15.	0.	10.
16.	-5.	10.
17.	-10.	10.
18.	-10.	5.
19.	-10.	0.
20.	-10.	-5.
21.	-10.	-10.
22.	-5.	-10.
23.	0.	-10.
24.	5.	-10.
25.	10.	-10.
26.	15.	-10.
27.	15.	-5.
28.	15.	0.
29.	15.	5.
30.	15.	10.
31.	15.	15.
32.	10.	15.
33.	5.	15.
34.	0.	15.
35.	-5.	15.
36.	-10.	15.
37.	-15.	15.
38.	-15.	10.
39.	-15.	5.
40.	-15.	0.
41.	-15.	-5.
42.	-15.	-10.
43.	-15.	-15.
44.	-10.	-15.
45.	-5.	-15.
46.	0.	-15.
47.	5.	-15.
48.	10.	-15.
49.	15.	-15.
50.	20.	-15.
51.	20.	-10.
52.	20.	-5.
53.	20.	0.
54.	20.	5.
55.	20.	10.
56.	20.	15.
57.	20.	20.
58.	15.	20.
59.	10.	20.
60.	5.	20.
61.	0.	20.
62.	-5.	20.
63.	-10.	20.
64.	-15.	20.
65.	-20.	20.
66.	-20.	15.
67.	-20.	10.
68.	-20.	5.
69.	-20.	0.
70.	-20.	-5.

COMPUTER PROGRAM DESCRIPTION

PSI016 Bias Data Generation IBM 1620

By John W. Hawes

PURPOSE:

To bias data for use in biased particle motion plots.

RESULT:

Input data for biased particle motion plots.

REQUIREMENTS:

1. A core storage of at least 40,000 digits.
2. The number of readings must not exceed 1500 for each trace. (This number could be increased for an IBM 1620 with a larger memory by changing the number in the dimension statement of the source program and recompiling.)
3. The form of input for the digital data is described in detail in the section on input.

INPUT:

The form of input for the digital data must be identical with that described in the section entitled "OUTPUT" for the computer program PSI002REV (Semi-Annual Report to U.S. Coast and Geodetic Survey by Planetary Sciences Incorporated, Dec. 31, 1962, page 39).

METHOD:

One of the biggest defects of particle motion plots

is that they are multivalued functions. The plot would be easier to interpret if the particle motion were smeared out along one of its axes by means of biased data. This is accomplished by removing any negative movement from one of the traces being plotted. The maximum negative derivative is found and a multiple of its absolute value added to all points on the trace.

A difficulty arises at the point where this greatest negative movement occurs. This maximum decrease is added to itself, resulting in zero movement, thus causing two data points of the biased coordinate to coincide. Therefore an increment, taken as 1/20 of the maximum negative movement, is added to the maximum negative movement. The absolute value of this constant is added to the first data reading, twice the absolute value of this constant is added to the second data reading, three times the absolute value to the third data reading, and so on. As a result, each value of the biased data is larger than the one preceeding.

OPERATING INSTRUCTIONS:

The operating procedures are identical to those described in computer program description PSI011.

OUTPUT:

The format of the output is identical with that of the input so that the data may be processed by other PSI codes. This code, PSI016 checks for sequence. Should any of the format cards or data cards be out of order, the message "CARD XX OUT OF SEQUENCE" will be typed on the

console typewriter, "XX" being the number of the misplaced card. To continue with the program,

1. Arrange the cards in proper order.
2. Replace the format cards and data cards in the reader hopper.
3. Depress Reader Start and Start keys.

The X-coordinate data used in the PSI015 test problem was used to test the bias generation code, PSI016. The biased results are plotted against the PSI015 Y-coordinate test values in figure 1. A flow chart and printout of PSI016 are also included on the following pages.

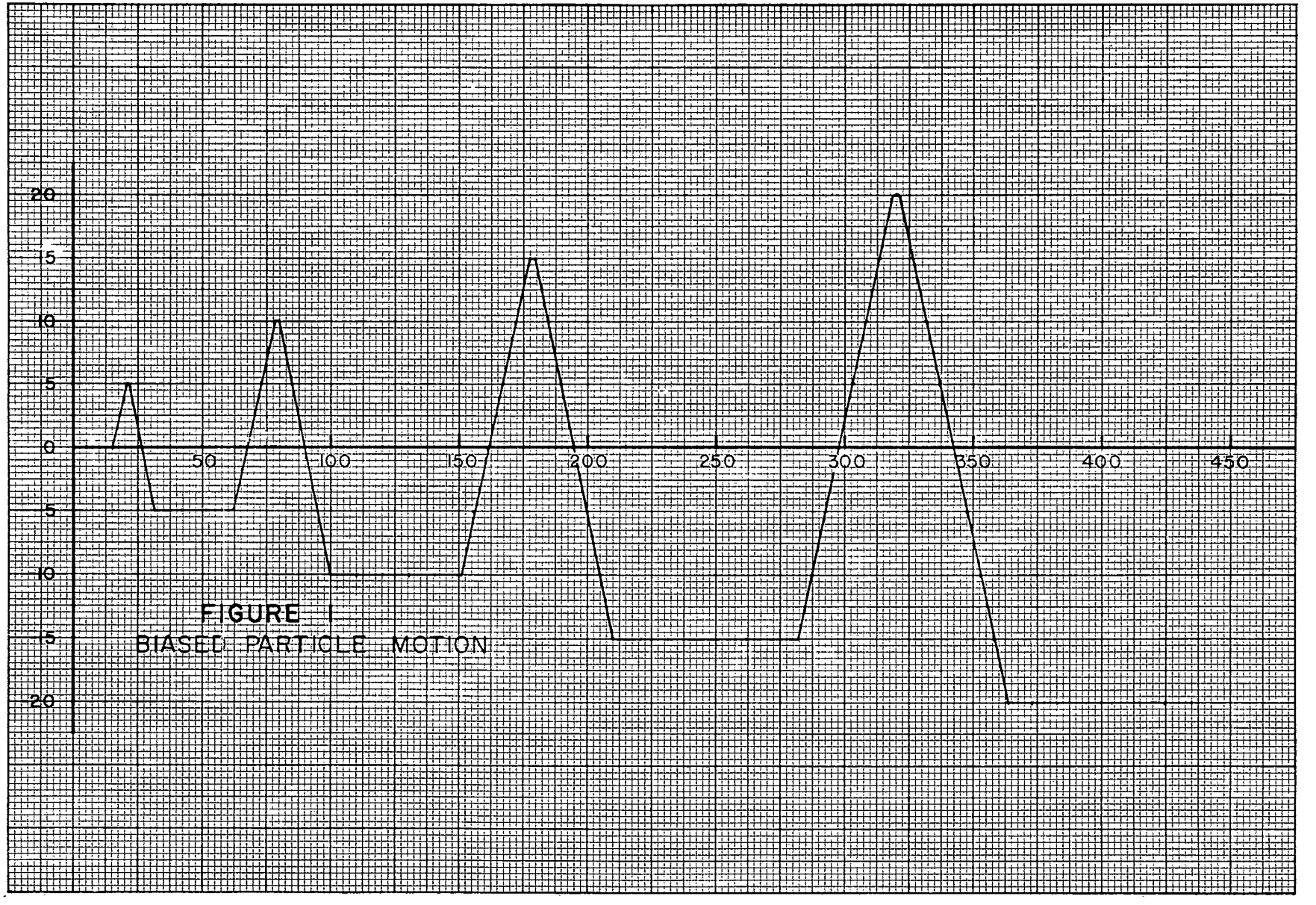

FIGURE 1
BIASED PARTICLE MOTION

INPUT X COORDINATE

```
1234 0000 1111                                                                  01
                                                                                02
                                                                                03
                          0080                                                  04
    0.        5.        5.        0.       - 5.       - 5.       - 5.          05
    0.        5.       10.       10.        10.        10.         5.          06
    0.      - 5.      -10.      -10.       -10.       -10.       -10.          07
  - 5.        0.        5.       10.        15.        15.        15.          08
   15.       15.       15.       10.         5.         0.       - 5.          09
  -10.      -15.      -15.      -15.       -15.       -15.       -15.          10
  -15.      -10.      - 5.        0.         5.        10.        15.          11
   20.       20.       20.       20.        20.        20.        20.          12
   20.       15.       10.        5.         0.       - 5.       -10.          13
  -15.      -20.      -20.      -20.       -20.       -20.       -20.          14
  -20.      -20.      -20.      -15.       -10.       - 5.         0.          15
    5.       10.       15.                                                     16
```

OUTPUT BIASED X COORDINATE

```
1234 0000 1111    0       0.      0.   0    0.0000        0.                    1
   0.0000    0    0.0000        0.    0.0000  0.0000    0.0000                 2
   0.0000        0.0.00000000        0.    0.0000        0.                    3
   0.0000    0.0000    0.   80    0                                             4
.5250E+01 .1550E+02 .2075E+02 .2100E+02 .2125E+02 .2650E+02 .3175E+02           5
.4200E+02 .5225E+02 .6250E+02 .6775E+02 .7300E+02 .7825E+02 .7850E+02           6
.7875E+02 .7900E+02 .7925E+02 .8450E+02 .8975E+02 .9500E+02 .1002E+03           7
.1105E+03 .1207E+03 .1310E+03 .1412E+03 .1515E+03 .1567E+03 .1620E+03           8
.1672E+03 .1725E+03 .1777E+03 .1780E+03 .1782E+03 .1785E+03 .1787E+03           9
.1790E+03 .1792E+03 .1845E+03 .1897E+03 .1950E+03 .2002E+03 .2055E+03          10
.2107E+03 .2210E+03 .2312E+03 .2415E+03 .2517E+03 .2620E+03 .2722E+03          11
.2825E+03 .2877E+03 .2930E+03 .2982E+03 .3035E+03 .3087E+03 .3140E+03          12
.3192E+03 .3195E+03 .3197E+03 .3200E+03 .3202E+03 .3205E+03 .3207E+03          13
.3210E+03 .3212E+03 .3265E+03 .3317E+03 .3370E+03 .3422E+03 .3475E+03          14
.3527E+03 .3580E+03 .3632E+03 .3735E+03 .3837E+03 .3940E+03 .4042E+03          15
.4145E+03 .4247E+03 .4350E+03 .0000E-99 .0000E-99 .0000E-99 .0000E-99          16
```

Y COORDINATE

5678 0000 0000

0080

0.	0.	5.	5.	5.	0.	- 5.
- 5.	- 5.	- 5.	0.	5.	10.	10.
10.	10.	10.	5.	0.	- 5.	-10.
-10.	-10.	-10.	-10.	-10.	- 5.	0.
5.	10.	15.	15.	15.	15.	15.
15.	15.	10.	5.	0.	- 5.	-10.
-15.	-15.	-15.	-15.	-15.	-15.	-15.
-15.	-10.	- 5.	0.	5.	10.	15.
20.	20.	20.	20.	20.	20.	20.
20.	20.	15.	10.	5.	0.	- 5.
-10.	-15.	-20.	-20.	-20.	-20.	-20.
-20.	-20.	-20.				

PSI 016

Bias Data Generation - Fortran II

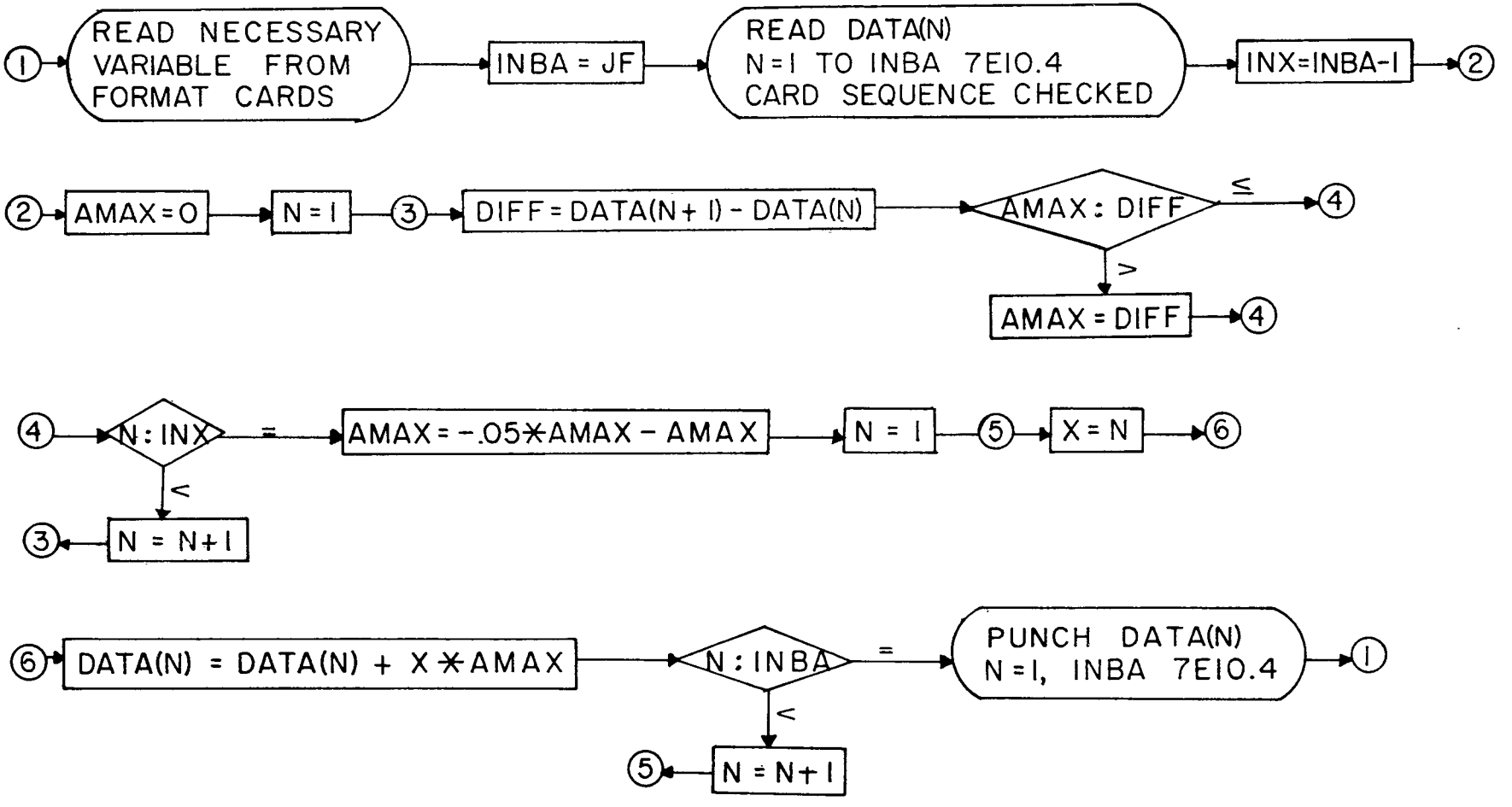

```
*0810
C                    PSI016
C         BIAS PLOT
      DIMENSION DATA(1500)
   21 READ 2, JA,JB,JC,JD,AE,AF,JG,AH,AI,IONE
    2 FORMAT (4I5, F9.0,F8.0,I4,F10.4,F10.0,17X,I2)
      IF (IONE - 1) 6, 7, 6
    7 READ 3, AK,JL,AM,AN,AO,AR,AS,ITWO
    3 FORMAT (F10.4,I5,F10.4,F10.0,F10.4,F8.4,F10.4,15X,I2)
      IF (ITWO -2) 8, 9, 8
    9 READ 4, BA,BC,BD,BE,BF,BG,ITHREE
    4 FORMAT (F10.4,F10.0,F10.8,F10.0,F10.4,F10.0,18X,I2)
      IF (ITHREE - 3) 10, 11, 10
   11 READ 5, BH,BI,BJ,JF,JE,IFOUR
    5 FORMAT (2F10.4,F6.0,2I5,42X,I2)
      IF (IFOUR - 4) 12, 13, 12
    6 PRINT 14
   14 FORMAT (25H CARD ONE OUT OF SEQUENCE)
      PAUSE
      GO TO 21
    8 PRINT 15
   15 FORMAT (25H CARD TWO OUT OF SEQUENCE)
      PAUSE
      GO TO 21
   10 PRINT 16
   16 FORMAT (27H CARD THREE OUT OF SEQUENCE)
      PAUSE
      GO TO 21
   12 PRINT 17
   17 FORMAT (26H CARD FOUR OUT OF SEQUENCE)
      PAUSE
      GO TO 21
   13 INBA = JF
      ICTR = 4
      DO 18 I = 1, INBA, 7
      ICTR = ICTR + 1
      READ 19,A1,A2,A3,A4,A5,A6,A7,ICT
   19 FORMAT (7E10.4,7X,I3)
      IF (ICTR - ICT) 20, 22, 20
   20 PRINT 23, ICTR
   23 FORMAT (5H CARD,I4,16H OUT OF SEQUENCE)
      PAUSE
      GO TO 21
   22 DATA(I) = A1
      DATA(I+1) = A2
      DATA(I+2) = A3
      DATA(I+3) = A4
      DATA(I+4) = A5
      DATA(I+5) = A6
   18 DATA(I+6) = A7
      INX = INBA-1
      AMAX = 0.0
      DO 30 N=1,INX
      DIFF = DATA(N+1)-DATA(N)
      IF(AMAX-DIFF)30,30,28
   28 AMAX = DIFF
   30 CONTINUE
      AMAX = -.05*AMAX-AMAX
      DO 32 N=1,INBA
      X = N
```

```
32 DATA(N) = DATA(N)+X*AMAX
   PUNCH 2, JA,JB,JC,JD,AE,AF,JG,AH,AI,IONE
   PUNCH 3, AK,JL,AM,AN,AO,AR,AS,ITWO
   PUNCH 4, BA,BC,BD,BE,BF,BG,ITHREE
   PUNCH 5, BH,BI,BJ,JF,JE,IFOUR
   ICT = 4
   DO 35 N=1,INBA,7
   ICT = ICT+1
   A1 = DATA(N)
   A2 = DATA(N+1)
   A3 = DATA(N+2)
   A4 = DATA(N+3)
   A5 = DATA(N+4)
   A6 = DATA(N+5)
   A7 = DATA(N+6)
35 PUNCH 37, A1,A2,A3,A4,A5,A6,A7,ICT
37 FORMAT (7E10.4,7X,I3)
   GO TO 21
   END
```

COMPUTER PROGRAM DESCRIPTION

PSI019 Pomeroy Plot IBM 1620

By John W. Hawes

PURPOSE:

To obtain an indication of longitudinal, transverse, and surface waves from vertical, radial, and transverse seismic data.

RESULT:

Traces significant to spectral analysis.

REQUIREMENTS:

1. A core storage of at least 40,000 digits.
2. The number of readings must not exceed 500 for each trace. (This number could be increased for an IBM 1620 with a larger memory by changing the number in the dimension statement of the source program and recompiling.)
3. The form of input for the digital data is described in detail in the section on input.

INPUT:

The form of input for the digital data must be identical with that described in the section entitled "Output" for the computer program PSI002REV (Semi-Annual Report to U. S. Coast and Geodetic Survey by Planetary Sciences Incorporated, December 31, 1962, page 3). The order of the two input traces is irrelevant. The order of input is as follows:

1. Four format cards of the first trace.
2. Data of the first trace.
3. Four format cards of the second trace.
4. Data of the second trace.

METHOD:

In spectral analysis, observation of vertical, transverse, and radial plots are not by themselves very useful. Pomeroy employed the technique of forming the product of certain of these seismograms. (Armour Research Foundation, "Discriminatory Analysis Applied to Classification of Seismic Phenomena," ARF Project E162, 30 June 1962, page 22.) This procedure is actually a special case of this cross-correlation function,

$$\phi(\tau) = \int g(t)h(t-\tau)dt,$$

the special case being for τ equal to zero--no relative shift of the functions

$$\phi(0) = \int [g(t) \cdot h(t)]dt$$

where g(t) and h(t) are the traces under consideration. We are plotting the elements of the integrand (the value in the brackets). (Geophysics Analysis Group, Department of Geology and Geophysics, Massachusetts Institute of Technology, "Predictive Decomposition of Time Series with Applications to Seismic Exploration, MIT GAG Report No. 7, July 12, 1954, page 195.)

The resultant time series exphasizes wave trains that

are in phase and de-emphasizes those out of phase, and thus tends to give sharper beginnings to the kind of wave anticipated. Vertical wave times radial wave results in longitudinal wave information, vertical times transverse gives shear wave information, radial times transverse gives Love wave information, and vertical times transverse gives Rayleigh wave information.

This program, PSI019, multiplies these traces together. Data readings of corresponding vertical, radial, and transverse traces are made at the same point in time, but leading data values of zero are deleted making traces of unequal length. In order to multiply only corresponding readings, early data is ignored.

OPERATING INSTRUCTIONS:

The operating procedures are identical to those described in computer program description PSI011.

OUTPUT:

Eight format cards are punched, four from each of the input traces to indicate which traces have been multiplied. The output data is in the form 7E10.4. The number of values is equal to that of the larger of the two input traces. Zero data values at the beginning of the output are equal in number to the difference between the number of data points in the input traces.

Should any of the format cards or data cards be out of order, the message "CARD XX OUT OF SEQUENCE" will be typed

on the console typewriter, "XX" being the number of the misplaced card. To continue with the program

1. Arrange the cards in proper order,
2. Replace all format and data cards of the input data in the reader hopper, and
3. Depress Reader Start and Start keys.

A test problem of three sets of input data were processed by this code, PSI019. These data were run in various combinations to test all loops in the program. This input and output are diagrammed in figure 1. A flow chart and printout of PSI019 are also included on the following pages.

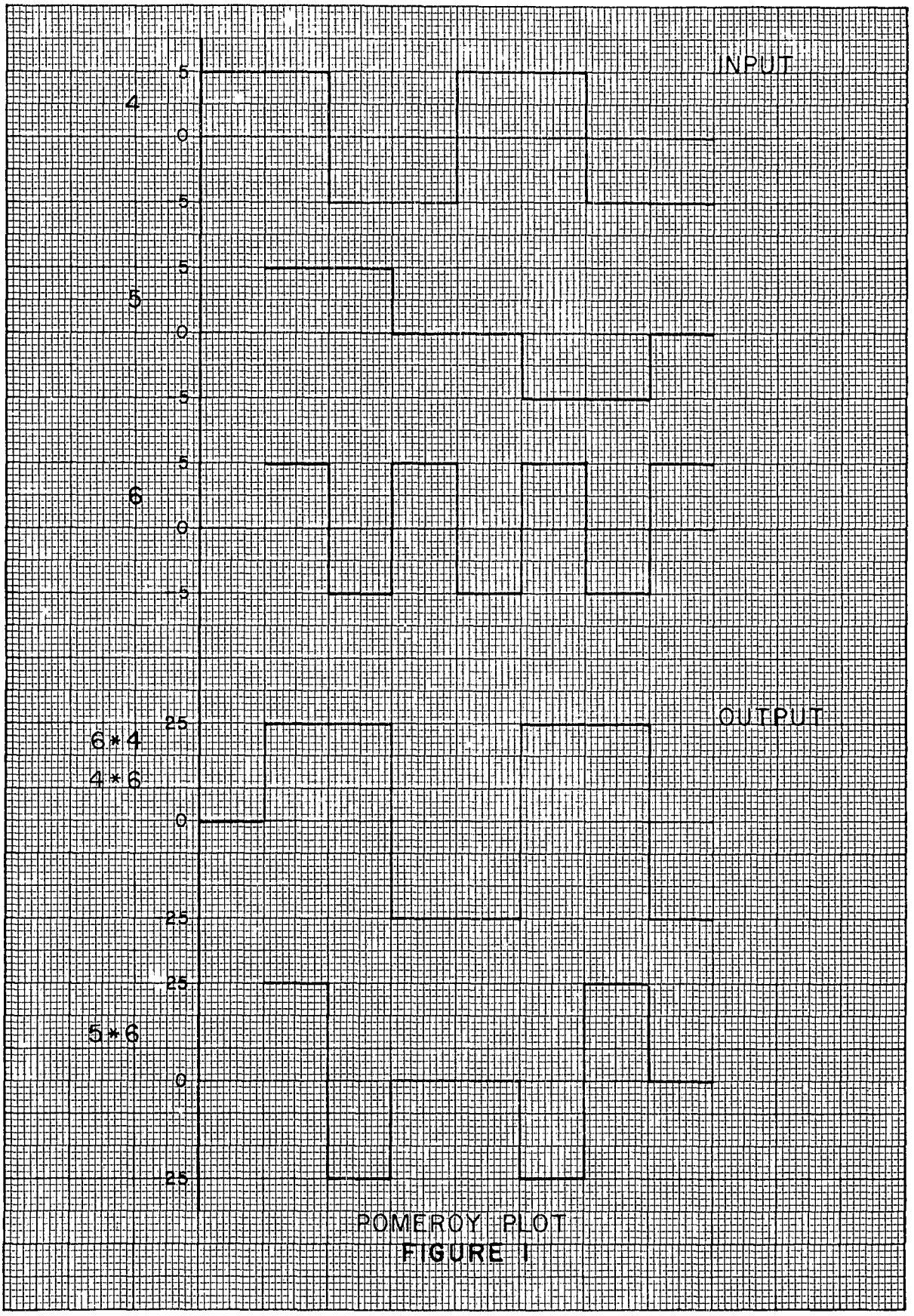
INPUT
5
4
0
5
5
5
0
5
5
6
0
5
OUTPUT
25
6*4
4*6
0
25
25
5*6
0
25
POMEROY PLOT

FIGURE 1

INPUT PSI019

```
4444 4444 4444                                                          01
                                                                        02
                                                                        03
                                40                                      04
    5        5        5        5        5        5        5             05
    5        5        5       -5       -5       -5       -5             06
   -5       -5       -5       -5       -5       -5        5             07
    5        5        5        5        5        5        5             08
    5        5       -5       -5       -5       -5       -5             09
   -5       -5       -5       -5       -5                               10


5555 5555 5555                                                          01
                                                                        02
                                                                        03
                                35                                      04
    5        5        5        5        5        5        5             05
    5        5        5       00       00       00       00              6
   00       00       00       00       00       00       -5             07
   -5       -5       -5       -5       -5       -5       -5             08
   -5       -5       00       00                                        9


6666 6666 6666                                                          01
                                                                        02
                                                                        03
                                35                                      04
    5        5        5        5        5       -5       -5             05
   -5       -5       -5        5        5        5        5             06
    5       -5       -5       -5       -5       -5        5             07
    5        5        5        5       -5       -5       -5             08
   -5       -5        5        5        5        5        5             09
```

OUTPUT

```
 6666 6666 6666    0        0.       0.   0    0.0000        0.                  1
    0.0000    0    0.0000         0.    0.0000  0.0000    0.0000                 2
    0.0000         0.0.00000000         0.    0.0000        0.                   3
    0.0000    0.0000    0.   35    0                                              4
 4444 4444 4444    0        0.       0.   0    0.0000        0.                  1
    0.0000    0    0.0000         0.    0.0000  0.0000    0.0000                 2
    0.0000         0.0.00000000         0.    0.0000        0.                   3
    0.0000    0.0000    0.   40    0                                              4
 .0000E-99 .0000E-99 .0000E-99 .0000E-99 .0000E-99 .2500E+02 .2500E+02            5
 .2500E+02 .2500E+02 .2500E+02 .2500E+02 .2500E+02 .2500E+02 .2500E+02            6
 .2500E+02-.2500E+02-.2500E+02-.2500E+02-.2500E+02-.2500E+02-.2500E+02            7
-.2500E+02-.2500E+02-.2500E+02-.2500E+02 .2500E+02 .2500E+02 .2500E+02            8
 .2500E+02 .2500E+02 .2500E+02 .2500E+02 .2500E+02 .2500E+02 .2500E+02            9
-.2500E+02-.2500E+02-.2500E+02-.2500E+02-.2500E+02 .0000E-99 .0000E-99           10

 4444 4444 4444    0        0.       0.   0    0.0000        0.                  1
    0.0000    0    0.0000         0.    0.0000  0.0000    0.0000                 2
    0.0000         0.0.00000000         0.    0.0000        0.                   3
    0.0000    0.0000    0.   40    0                                              4
 6666 6666 6666    0        0.       0.   0    0.0000        0.                  1
    0.0000    0    0.0000         0.    0.0000  0.0000    0.0000                 2
    0.0000         0.0.00000000         0.    0.0000        0.                   3
    0.0000    0.0000    0.   35    0                                              4
 .0000E-99 .0000E-99 .0000E-99 .0000E-99 .0000E-99 .2500E+02 .2500E+02            5
 .2500E+02 .2500E+02 .2500E+02 .2500E+02 .2500E+02 .2500E+02 .2500E+02            6
 .2500E+02-.2500E+02-.2500E+02-.2500E+02-.2500E+02-.2500E+02-.2500E+02            7
-.2500E+02-.2500E+02-.2500E+02-.2500E+02 .2500E+02 .2500E+02 .2500E+02            8
 .2500E+02 .2500E+02 .2500E+02 .2500E+02 .2500E+02 .2500E+02 .2500E+02            9
-.2500E+02-.2500E+02-.2500E+02-.2500E+02-.2500E+02 .0000E-99 .0000E-99           10

 5555 5555 5555    0        0.       0.   0    0.0000        0.                  1
    0.0000    0    0.0000         0.    0.0000  0.0000    0.0000                 2
    0.0000         0.0.00000000         0.    0.0000        0.                   3
    0.0000    0.0000    0.   35    0                                              4
 6666 6666 6666    0        0.       0.   0    0.0000        0.                  1
    0.0000    0    0.0000         0.    0.0000  0.0000    0.0000                 2
    0.0000         0.0.00000000         0.    0.0000        0.                   3
    0.0000    0.0000    0.   35    0                                              4
 .2500E+02 .2500E+02 .2500E+02 .2500E+02 .2500E+02-.2500E+02-.2500E+02            5
-.2500E+02-.2500E+02-.2500E+02 .0000E-99 .0000E-99 .0000E-99 .0000E-99            6
 .0000E-99 .0000E-99 .0000E-99 .0000E-99 .0000E-99 .0000E-99-.2500E+02            7
-.2500E+02-.2500E+02-.2500E+02-.2500E+02 .2500E+02 .2500E+02 .2500E+02            8
 .2500E+02 .2500E+02 .0000E-99 .0000E-99 .0000E-99 .0000E-99 .0000E-99            9
```

PSI 019

Pomeroy Plot — Fortran II

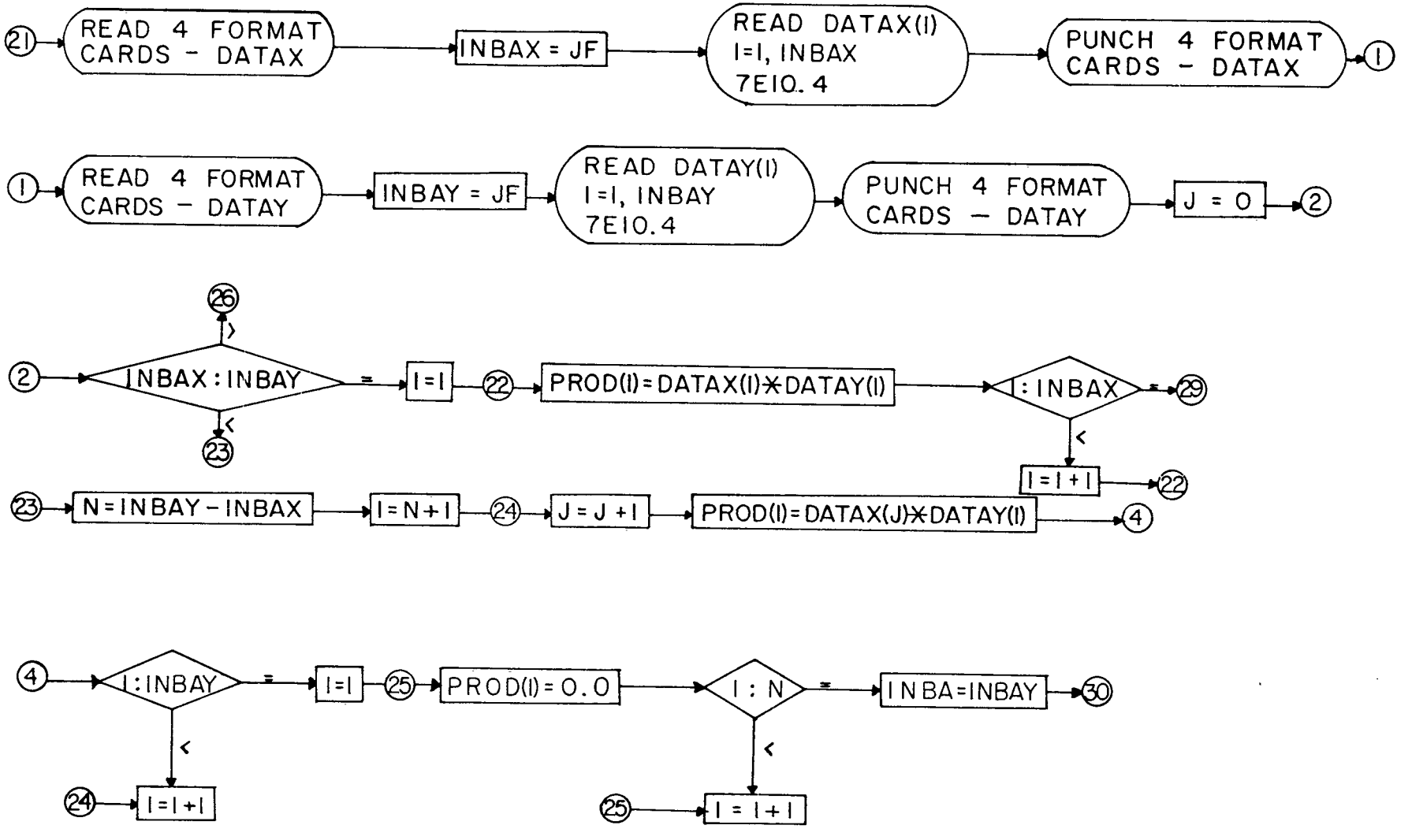

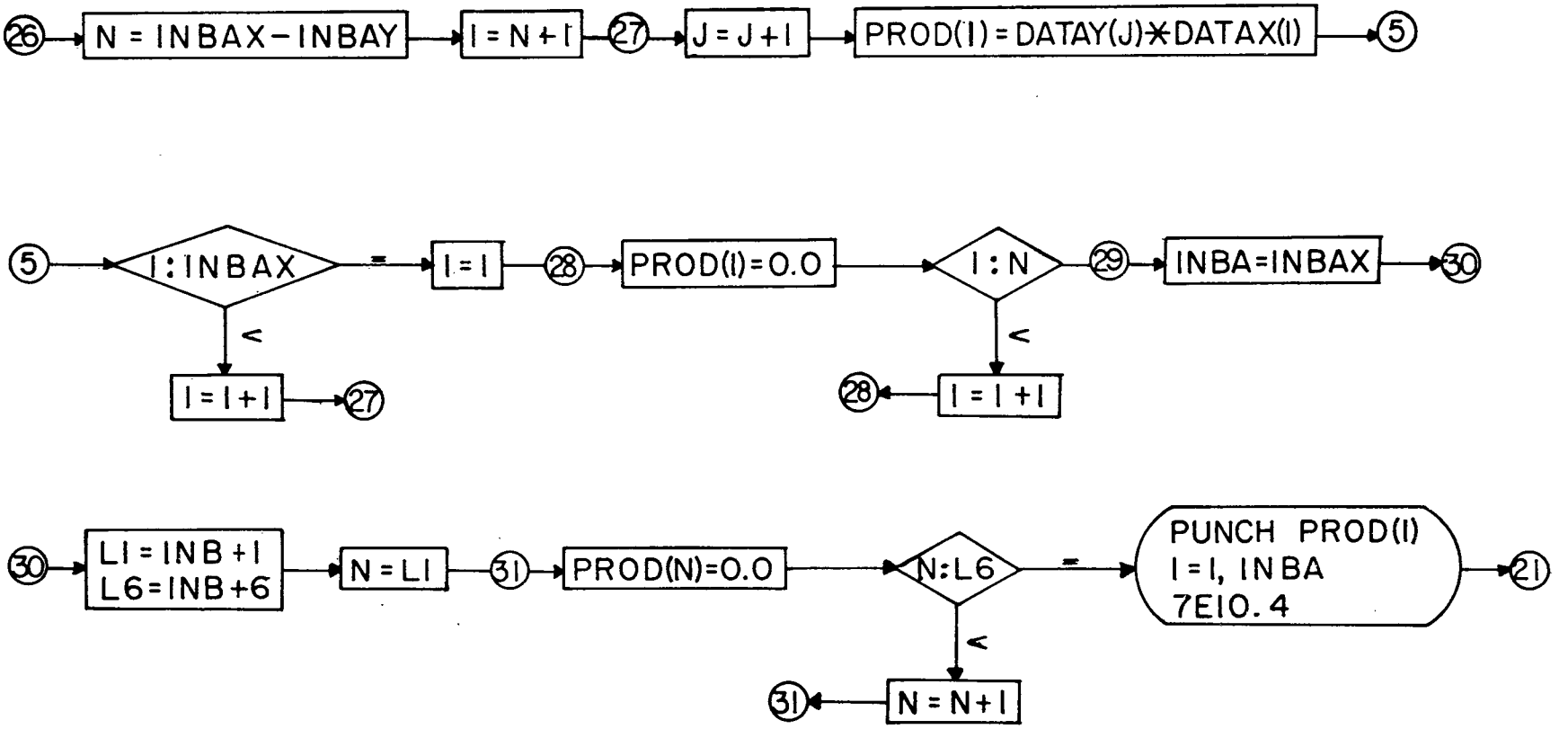
26
N = INBAX − INBAY
I = N + 1
27
J = J + 1
PROD(I) = DATAY(J) * DATAX(I)
5
5
I : INBAX
=
I = 1
28
PROD(I) = 0.0
I : N
29
INBA = INBAX
30
<
I = I + 1
27
<
28
I = I + 1
30
LI = INB + 1
L6 = INB + 6
N = LI
31
PROD(N) = 0.0
N : L6
=
PUNCH PROD(I)
I = 1, INBA
7E10.4
21
<
31
N = N + 1

```
*0810
C                    POMEROY PLOT     PSI 19
      DIMENSION DATAX(500),DATAY(50 ),PROD(500)
   21 READ 2, JA,JB,JC,JD,AE,AF,JG,AH,AI,IONE
    2 FORMAT (4I5, F9.0,F8.0,I4,F10.4,F10. ,17X,I2)
      IF (IONE   1) 6, 7, 6
    7 READ 3, AK,JL,AM,AN,AO,AR,AS,ITWO
    3 FORMAT (F10.4,I5,F1 .4,F10.0,F1 .4,F8.4,F1 .4,15X,I2)
      IF (ITWO  2) 8, 9, 8
    9 READ 4, BA,BC,BD,BE,BF,BG,ITHREE
    4 FORMAT (F10.4,F10.0,F10.8,F10. ,F10.4,F10. ,18X,I2)
      IF (ITHREE - 3) 10, 11, 10
   11 READ 5, BH,BI,BJ,JF,JE,IFOUR
    5 FORMAT (2F10.4,F6.0,2I5,42X,I2)
      IF (IFOUR   4) 12, 13, 12
    6 PRINT 14
   14 FORMAT (25H CARD ONE OUT OF SEQUENCE)
      PAUSE
      GO TO 21
    8 PRINT 15
   15 FORMAT (25H CARD TWO OUT OF SEQUENCE)
      PAUSE
      GO TO 21
   10 PRINT 16
   16 FORMAT (27H CARD THREE OUT OF SEQUENCE)
      PAUSE
      GO TO 21
   12 PRINT 17
   17 FORMAT (26H CARD FOUR OUT OF SEQUENCE)
      PAUSE
      GO TO 21
   13 INBAX = JF
      ICTR = 4
      DO 18 I = 1,INBAX,7
      ICTR = ICTR   1
      READ 19,A1,A2,A3,A4,A5,A6,A7,ICT
   19 FORMAT (7E10.4,7X,I3)
      IF (ICTR.  ICT) 20, 22, 20
   20 PRINT 23, ICTR
   23 FORMAT (5H CARD,I4,16H OUT OF SEQUENCE)
      PAUSE
      GO TO 21
   22 DATAX(I) = A1
      DATAX(I+1) = A2
      DATAX(I+2) = A3
      DATAX(I+3) = A4
      DATAX(I+4) = A5
      DATAX(I+5) = A6
   18 DATAX(I+6) = A7
      PUNCH 2, JA,JB,JC,JD,AE,AF,JG,AH,AI,IONE
      PUNCH 3, AK,JL,AM,AN,AO,AR,AS,ITWO
      PUNCH 4, BA,BC,BD,BE,BF,BG,ITHREE
      PUNCH 5, BH,BI,BJ,JF,JE,IFOUR
      READ 2, JA,JB,JC,JD,AE,AF,AG,AH,AI,IONE
      IF (IONE   1) 6,107,6
  107 READ 3, AK,JL,AM,AN,AO,AR,AS,ITWO
      IF (ITWO   2) 8,109,8
  109 READ 4, BA,BC,BD,BE,BF,BG,ITHREE
      IF (ITHREE - 3) 10,111,10
  111 READ 5, BH,BI,BJ,JF,JE,IFOUR
```

```
      IF (IFOUR   4) 12,113,12
  113 INBAY = JF
      ICTR = 4
      DO 118 I = 1,INBAY,7
      ICTR = ICTR   1
      READ 19, A1,A2,A3,A4,A5,A6,A7,ICT
      IF (ICTR   ICT) 20,122,20
  122 DATAY(I) = A1
      DATAY(I+1) = A2
      DATAY(I+2) = A3
      DATAY(I+3) = A4
      DATAY(I+4) = A5
      DATAY(I+5) = A6
  118 DATAY(I+6) = A7
      PUNCH 2, JA,JB,JC,JD,AE,AF,JG,AH,AI,IONE
      PUNCH 3, AK,JL,AM,AN,AO,AR,AS,ITWO
      PUNCH 4, BA,BC,BD,BE,BF,BG,ITHREE
      PUNCH 5, BH,BI,BJ,JF,JE,IFOUR
      J =
      IF (INBAX INBAY) 40,42,44
   42 DO 25 I=1,INBAX
   25 PROD(I) = DATAX(I)*DATAY(I)
      GO TO 49
   40 N = INBAY INBAX
      M = N+1
      DO 26 I=M,INBAY
      J = J+1
   26 PROD(I) = DATAX(J)*DATAY(I)
      DO 27 I=1,N
   27 PROD(I) =  .
      INBA = INBAY
      GO TO 50
   44 N = INBAX INBAY
      M = N+1
      DO 28 I=M,INBAX
      J = J+1
   28 PROD(I) = DATAY(J)*DATAX(I)
      DO 29 I=1,N
   29 PROD(I) =  .
   49 INBA = INBAX
   50 L1 = INBA   1
      L6 = INBA   6
      DO 3  N=L1,L6
   30 PROD(N) =  .
      ICT = 4
      DO 51 I=1,INBA,7
      ICT = ICT 1
      A1 = PROD(I)
      A2 = PROD(I+1)
      A3 = PROD(I+2)
      A4 = PROD(I+3)
      A5 = PROD(I+4)
      A6 = PROD(I+5)
      A7 = PROD(I+6)
   51 PUNCH 52, A1,A2,A3,A4,A5,A6,A7,ICT
   52 FORMAT (7E10.4,7X,I3)
      GO TO 21
      END
```

APPENDIX A

SPECIAL TREATMENT OF THE FOURIER TRANSFORM

(By Ernest Schlesinger)

Consider an arbitrary non-periodic function f(t), a function of time t, for which the Fourier transform F(w), defined by $F(w) = \int_{-\infty}^{\infty} f(t)e^{-iwt}dt$, exists.

When one knows the transform F(w), one knows the function, and vice versa.

An unusual and valuable way of using the Fourier transform is to make the upper limit finite, instead of infinite. (A. A. Kharkevich, Spectra and Analysis, 1960, p. 18.) The integral then depends both on the frequency w and on the upper limit, say u. Thus we have

$$G(w,u) = \int_{-\infty}^{u} f(t)e^{-iwt}dt$$

Such modification is precisely equivalent to defining a new function g(t) as follows:

$$g_u(t) = \begin{cases} f(t), & t \leq u \\ 0, & t > 0 \end{cases}$$

In other words, we set f(t) = 0 for values of t > u.

Then $G(w,u) = \int_{-\infty}^{\infty} g_u(t)e^{-iwt}dt$

Thus G(w,u) is really the Fourier transform of f in which we have set part of the range of f to be equal to zero.

Now the value of this approach is as follows: Changes in the function f(t) as t increases can be studied by observing changes in the function G as u increases. Naturally it is expected that for various values of u, G will differ, for this is equivalent to taking Fourier transforms of <u>different</u> but <u>closely related</u>, functions (namely functions which agree for all values below some t).

A sketch may make this clearer. If the function f(t) looks like this:

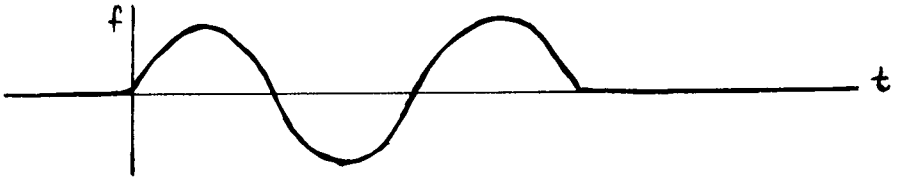

the functions g_u may look like this:

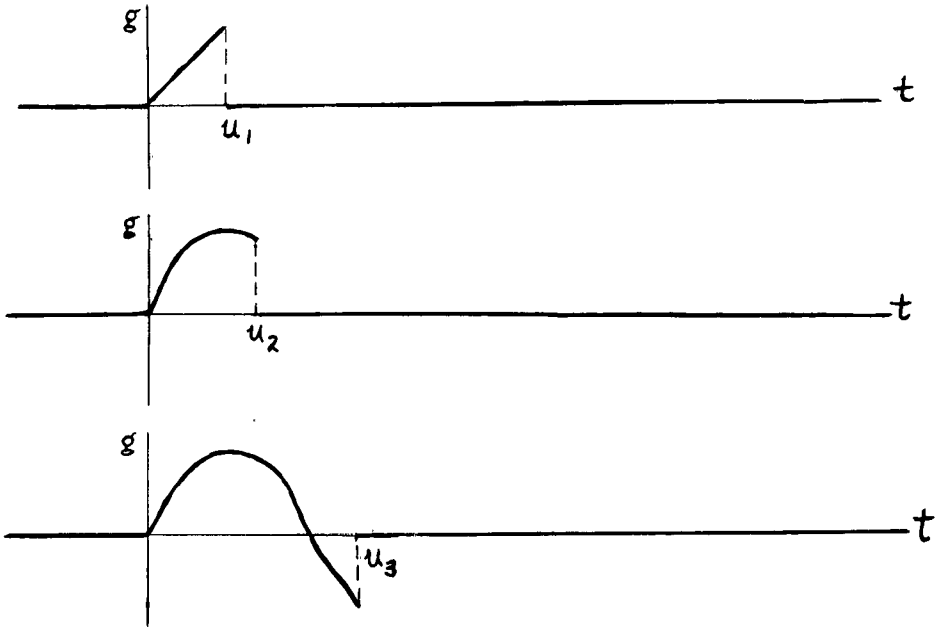

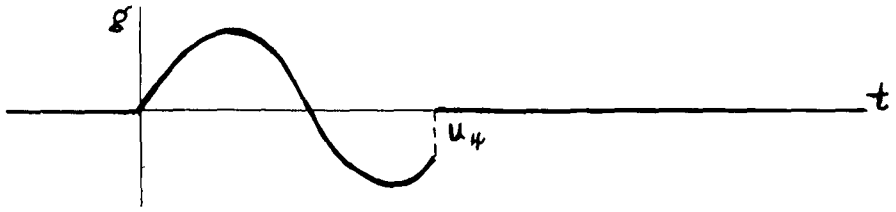

and so forth.

The Fourier transforms of each of these g's would then be the same as $\int_{-\infty}^{u} f(t)e^{-iwt}dt$

for $u = u_1, u_2, u_3, u_4 \cdots$

A specific example, in which the transform may be easily found, is given below:

$$f(t) = \begin{cases} 1, & a \le t \le b \\ 0, & \text{otherwise} \end{cases}$$

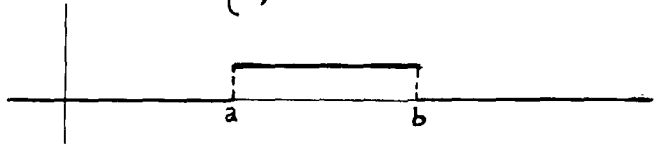

Let us find the Fourier transforms of this function in the special sense described above.

$$G(w,u) = \int_{-\infty}^{u} f(t)e^{-iwt}dt$$

$$= \begin{cases} 0, & \text{if } u < a \\ \int_{a}^{u} e^{-iwt}dt, & \text{if } a \le u \le b \\ \int_{a}^{b} e^{-iwt}dt, & \text{if } u > b \end{cases}$$

Thus we need merely find

$$G(w,u) = \int_a^u e^{-iwt}dt \quad \text{(where } a \le u \le b\text{)}$$

$$= \frac{1}{-iw}e^{-iwt}\Big|_a^u = \frac{1}{-iw}\left[e^{-iwu} - e^{-iwa}\right] = \frac{i}{w}\left[e^{-iwu} - e^{-iwa}\right]$$

$$= \frac{i}{w}\left[\text{coswu} - i\text{sinwu} - \text{coswa} + i\text{sinwa}\right]$$

$$= \frac{i}{w}\left[(\text{coswu} - \text{coswa}) - i(\text{sinwu} - \text{sinwa})\right]$$

$$= \frac{1}{w}\left[i(\text{coswu} - \text{coswa}) - i^2(\text{sinwu} - \text{sinwa})\right]$$

$$= \frac{1}{w}\left[(\text{sinwu} - \text{sinwa}) + i(\text{coswu} - \text{coswa})\right]$$

= (using standard trigonometric identities from Mathematics Tables)

$$= \frac{1}{w}\left[2\sin\tfrac{1}{2}(wu - wa)\cos\tfrac{1}{2}(wu + wa) + \right.$$

$$\left. + i(-2\sin\tfrac{1}{2}(wu + wa)\sin\tfrac{1}{2}(wu - wa)\right]$$

$$= \frac{2\sin\frac{1}{2}(wu - wa)}{w}\left[\cos\tfrac{1}{2}(wu + wa) - i\sin\tfrac{1}{2}(wu + wa)\right]$$

$$= \frac{2\sin\frac{1}{2}(wu - wa)}{w}e^{-\frac{1}{2}i(wu - wa)}$$

$$= \frac{2\sin\frac{1}{2}w(u - a)}{w}e^{-\frac{1}{2}iw(u - a)}$$

The amplitude $A(w,u)$ will be $\dfrac{2\sin\frac{1}{2}w(u-a)}{w}$;

the phase $\Phi(w,u)$ will be $-\frac{1}{2}w(u-a)$.

[Note that when $u \geq b$ this reduces to the ordinary Fourier transform of f,

$$F(w) = \int_{-\infty}^{\infty} f(t)e^{-iwt}dt = \frac{2\sin\frac{1}{2}w(b-a)}{w}e^{-\frac{1}{2}iw(b-a)}.]$$

Now as u increases from a to b, the phase angle of this special transform changes from 0 to $-\frac{1}{2}w(b-a)$. If one graphs the phase angle as a function of the frequency w, the slope of the graph will depend on u; in fact the slope will be $-\frac{1}{2}(u-a)$ for $a \leq u \leq b$.

To illustrate with a graph, let $a = 0$. Then graphs of the phase $\Phi(w,u)$ as a function of w will look like these:

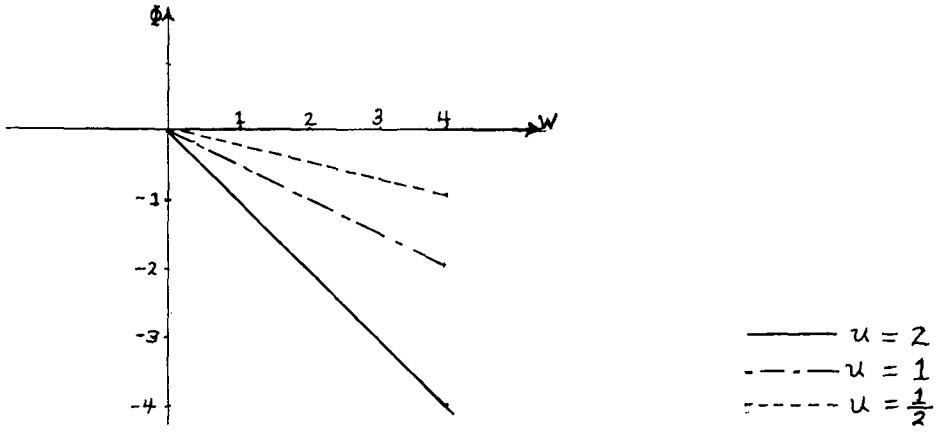

Thus we have a case in which the slope of the phase is directly proportional to u, the upper limit.